CM, CME

Horizontal, multistage centrifugal pumps

50/60 Hz

be
think
innovate

GRUNDFOS

Table of contents

1. Product introduction **5**

2. Overview **7**

3. Applications **8**

4. Features and benefits **10**

5. Identification **12**

6. Product range **13**
CM, CME . . . 13
CM self-priming . . . 15

7. Performance range **16**
CM, 50 Hz . . . 16
CM, 60 Hz . . . 16
CM self-priming, 50 Hz . . . 17
CM self-priming, 60 Hz . . . 17
CME, 50/60 Hz . . . 18

8. Operating conditions **19**
Ambient temperature . . . 19
Storage and transport temperature . . . 19
Maximum operating pressure and permissible liquid temperature . . . 19
Frequency of starts and stops . . . 20
Operation in condensing environments . . . 20
Environmental rating . . . 20
Operating range of the shaft seal . . . 21
Viscosity . . . 21
Sound pressure level . . . 21

9. Installation **23**
Installation altitude for CM . . . 23
Installation altitude for CME . . . 23
Installation of pump . . . 23

10. Construction **24**
Pump . . . 24
Motor . . . 24
Frequency converter operation . . . 25
Shaft seal . . . 25
Material specification . . . 29

11. CME pumps **30**
Communication with CME pumps . . . 30
Speed control of CME pumps . . . 31

12. Grundfos CUE **32**
CM pumps connected to Grundfos CUE external frequency converters . . . 32

13. Approvals and markings **33**
CM, CME pumps . . . 33
Markings . . . 34
CM self-priming pumps . . . 34

14. Certificates **35**

15. Selection of pumps **38**
Selection of CME pumps . . . 39

16. How to read the curve charts **40**
Guidelines for performance curves . . . 40

17. Performance curves, CM 50 Hz **41**
CM 1 . . . 41
CM 3 . . . 42
CM 5 . . . 43
CM 10 . . . 44
CM 15 . . . 45
CM 25 . . . 46

18. Performance curves, CM 60 Hz **47**
CM 1 . . . 47
CM 3 . . . 48
CM 5 . . . 49
CM 10 . . . 50
CM 15 . . . 51
CM 25 . . . 52

19. Performance curves, CM self-priming, 50 Hz **53**
CM 1 . . . 53
CM 3 . . . 55
CM 5 . . . 57

20. Performance curves, CM self-priming, 60 Hz **60**
CM 1 . . . 60
CM 3 . . . 62
CM 5 . . . 64

21. Performance curves, CME 50/60 Hz **66**
CME 1 . . . 66
CME 3 . . . 67
CME 5 . . . 68
CME 10 . . . 69
CME 15 . . . 70
CME 25 . . . 71

22. Dimensions, CM 50 Hz **72**
CM 1-A . . . 72
CM 1-I and CM 1-G . . . 73
CM 3-A . . . 74
CM 3-I and CM 3-G . . . 75
CM 5-A . . . 76
CM 5-I and CM 5-G . . . 77
CM 10-A . . . 78
CM 10-I and CM 10-G . . . 79
CM 15-A . . . 80
CM 15-I and CM 15-G . . . 81
CM 25-A . . . 82
CM 25-I and CM 25-G . . . 83

23. Dimensions, CM 60 Hz and 50/60 Hz **84**
CM 1-A . . . 84
CM 1-I and CM 1-G . . . 86
CM 3-A . . . 88
CM 3-I and CM 3-G . . . 90
CM 5-A . . . 92
CM 5-I and CM 5-G . . . 93
CM 10-A . . . 95
CM 10-I and CM 10-G . . . 96
CM 15-A . . . 98
CM 15-I and CM 15-G . . . 99
CM 25-A . . . 100
CM 25-I and CM 25-G . . . 101

24. Dimensions, CM self-priming 50 Hz and 60 Hz 102

25. Dimensions, CME 60 Hz and 50/60 Hz 103
CME 1-A . . . 103
CME 1-I and CME 1-G . . . 104
CME 3-A . . . 105
CME 3-I and CME 3-G . . . 106
CME 5-A . . . 107
CME 5-I and CME 5-G . . . 108
CME 10-A . . . 109
CME 10-I and CME 10-G . . . 110
CME 15-A . . . 111
CME 15-I and CME 15-G . . . 112
CME 25-A . . . 113
CME 25-I and CME 25-G . . . 114

26. Weights and shipping volume 115
CM non-self-priming pumps . . . 115
CM non-self-priming pumps . . . 118
CM self-priming pumps . . . 122
CME non-self-priming pumps . . . 122
CME non-self-priming pumps . . . 124

27. Electrical data 126
Mains-operated motors, 50 Hz . . . 126
Mains-operated motors, 60 Hz . . . 126
Mains-operated motors, 50/60 Hz . . . 128
Speed-controlled motors . . . 129
Additional data for speed-controlled motors . . . 130

28. Customisation 133
Motors . . . 133
Pumps . . . 138

29. Accessories 139
Pipe connections . . . 139
Potentiometer for CME . . . 142
Communication interface modules (CIM) for CME . . . 142
Grundfos GO Remote . . . 142
Sensors for CM, CME . . . 143
MP 204 motor protector . . . 145
Cover for CM motor . . . 145

30. Grundfos Product Center 146

1. Product introduction

The Grundfos CM and CME pumps are horizontal, multistage, end-suction centrifugal pumps. The pumps are of the close-coupled type and available as either self-priming or non-self-priming pumps. CM pumps are fitted with mains-operated motors whereas the motor for CME pumps has an integrated frequency converter. Both CM and CME pumps have mechanical shaft seals.

The CM and CME pumps are available in these three material versions:

- cast iron (EN-GJL-200)*
- stainless steel (EN 1.4301/AISI 304)
- stainless steel (EN 1.4401/AISI 316).

* The pump shaft, impeller, chamber and filling plugs are made of stainless steel (EN 1.4301/AISI 304).

CM

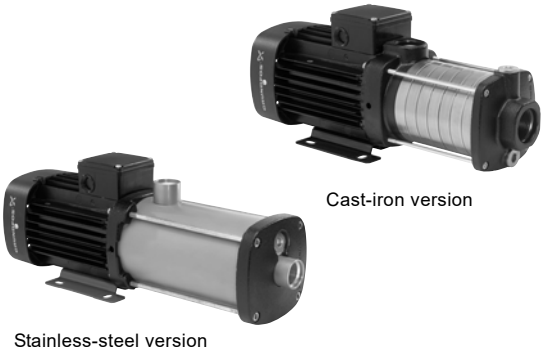

Fig. 1 Grundfos CM pumps

The CM pumps are unique products that have been developed in order to fulfil a wide variety of customer demands.

The CM pumps are available in various sizes and numbers of stages to provide the flow rate and pressure required.

The CM pumps consist of two main components: the motor and the pump unit. The motor is a Grundfos motor designed to EN standards. The pump unit incorporates optimised hydraulics and offers various types of connections.

The pumps offer many advantages, some of which are listed below and described in detail in *Features and benefits* on page 10:

- compact design
- worldwide usage
- high reliability
- service friendly
- wide performance range
- low noise
- customised solutions.

CME

Fig. 2 Grundfos CME pump

The CME pumps are built on the basis of CM pumps.

CME pumps belong to the so-called E-pump family.

The difference between the CM and the CME pump ranges is the motor.

The CME pump motor is a Grundfos MGE motor designed to EN standards. The motor incorporates a frequency converter.

Frequency control enables continuously variable control of the motor speed, which makes it possible to set the pump to operation at any duty point. The aim of continuously variable control of the motor speed is to adjust the performance to a given requirement.

You can connect a pressure sensor to the built-in frequency converter on CME pumps. For further information, see section *Sensors for CM, CME* on page 143.

The pump materials are identical to those of the CM pump range.

Highest energy efficiency rating worldwide

CME pumps are fitted with the new-generation MGE motors which are permanent-magnet motors incorporating a high-efficiency frequency converter. This ensures an even higher efficiency of the pump.

The motor is energy efficiency class IE5 according to IEC 60034-30-2. In combination with the integrated frequency converter, the combined power drive system is efficiency class IES2 according to IEC 50598-2.

Selecting a CME pump

Select a CME pump if the following features are required:

- controlled operation, that is, the consumption fluctuates
- constant pressure
- communication with the pump.

Adaptation of performance through frequency-controlled speed offers obvious benefits such as the following:

- energy savings
- increased comfort
- control and monitoring of the application and pump performance.

For further information about CME pumps, see *CME pumps* on page 30.

CM-L for leakage-free applications

TM06 9639 2717

Fig. 3 Grundfos CM-L pump

For applications where a compact, leakage-free pump is required, we offer the CM-L pump range.

CM-L pumps are hermetically closed due to their canned motor and are therefore designed without a shaft seal. CM-L pumps offer silent operation, as the liquid-cooled motor eliminates the need for a motor fan. The motor has liquid-lubricated motor bearings.

Designed for sensitive cooling applications

CM-L pumps are designed for applications where leakage cannot be accepted, such as the following.

Delicate temperature control:

- Cooling of equipment in server rooms
- cooling of medical and laboratory equipment
- cooling of industrial equipment like laser welders and injection moulding tools.

Temperature control units where maintenance is inconvenient:

- Cooling of solar panels in remote areas
- cooling of wind turbines.

Selecting a CM-L pump

Select a CM-L pump if the following features are required:

- Leakage-free
- Ultra-compact pump
- Low-noise operation
- Maintenance-free operation
- Easy installation.

CM-L data booklet

For further information, see the separate CM-L data booklet available in Grundfos Product Center.

https://net.grundfos.com/qr/i/99419708

2. Overview

Applications

Pages 8 and 9

Identification

Page 12

Product range

Pages 13 and 14

Operating conditions

Pages 19 to 22

Construction

Pages 24 to 29

Certificates and approvals

Pages 35 and 36

Selection and sizing

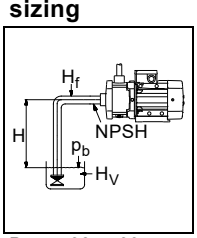

Pages 38 to 39

Pipe connections

Pages 39 and 138

Performance curves

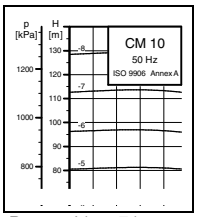

Pages 41 to 71

Dimensions

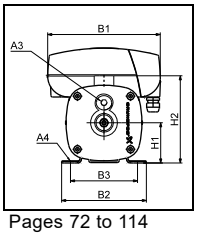

Pages 72 to 114

Motor data

Pages 126 to 130

Accessories

Pages 139 to 145

Customisation

Page 133

Further product information

Page 146

3. Applications

The CM and CME pumps are designed to cover a wide variety of applications, ranging from small domestic installations to large industrial systems. The pumps are therefore suitable for a wide diversity of pumping systems where the performance and material of the pump must meet specific demands.

Some of the most typical applications are mentioned below:

- washing and cleaning
- water treatment
- temperature control
- pressure boosting.

Washing and cleaning

Gr3572

Fig. 4 Washing and cleaning

CM and CME pumps can be used in washing and cleaning applications, which usually involve pumping of water containing soap or other cleaning agents.

Reference applications

Typical washing and cleaning applications:

- Degreasing and washing of production equipment in industrial environments such as the food and beverage industry
- washing machines
- vehicle-washing tunnels
- mobile-washing units
- units for CIP (clean-in-place).

Water treatment

Gr7052

Fig. 5 Water treatment

In water treatment plants, the water undergoes a process which makes it more suited for its end use. In this process, the CM and CME pumps can be utilised either as feed pumps or as booster pumps.

Reference applications

Typical water treatment applications:

- Nano-, micro- and ultra-filtration systems
- softening, ionising, demineralising systems
- desalination systems
- distillation systems
- separators
- swimming baths.

Temperature control

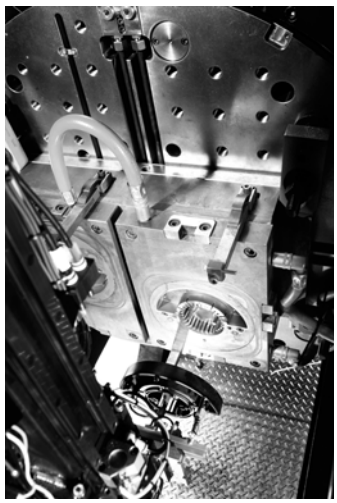

GrA6288

Fig. 6 Temperature control

Temperature control involves applications where the CM and CME pumps circulate a liquid in a closed loop consisting of a heating or cooling element for optimising a process by means of temperature. Temperature control is also chilling of equipment or food and beverage in the food production industry.

Reference applications

The CM and CME pumps can for example be used in temperature control systems such as the following:

- electronic data processing
- laser equipment
- medical equipment
- industrial refrigeration
- heating and cooling in industrial processes
- moisturising and humidifying.

To ensure safe and reliable operation in applications involving temperature control, we offer CM and CME pumps designed to meet your needs.

The CM and CME pumps are suitable for the following typical applications:

- liquids at temperatures down to -20 °C
- high-temperature liquids
- high-viscous liquids.

Pumping of liquids at temperatures down to -20 °C

When pumping liquids at temperatures down to -20 °C, it is crucial that the pump parts are made of the right materials and have the right dimensions. At such low temperatures, the selection of wrong materials and dimensions may cause deformation because of thermal expansion, and eventually stoppage of operation.

Note that CM and CME pumps for pumping liquids at temperatures below -20 °C are available on request. Please contact Grundfos.

Pumping of high-temperature liquids

Pumping hot liquids such as water-based liquids up to 120 °C demands much of the pump parts, such as shaft seals and rubber parts.

Pumping of high-viscous liquids

In applications where high-viscous liquids are pumped, the motor of the pump can be overloaded, and the pump performance will be reduced.

The viscosity of a pumped liquid depends strongly on the pumped liquid and its temperature.

To meet the above-mentioned requirements, we offer CM and CME pumps with oversize motors.

Pressure boosting

Gr0526

Fig. 7 Pressure boosting

In pressure-boosting applications, the pumped liquid must be delivered at a desired pressure on demand. The main priorities in pressure-boosting applications are to ensure maximum reliability and user comfort. Therefore, the CM and CME pumps are also ideal for such applications.

Reference applications

Typical pressure-boosting applications:

- Pressure boosting and transfer of drinking water
- process-water systems.

Other applications

Besides the applications mentioned above, the CM and CME pumps can be used in many other applications.

Examples:

- Distilling systems
- dosing/mixing
- evaporation
- comprised machinery
- chemical industry
- pharmaceutical industry.

4. Features and benefits

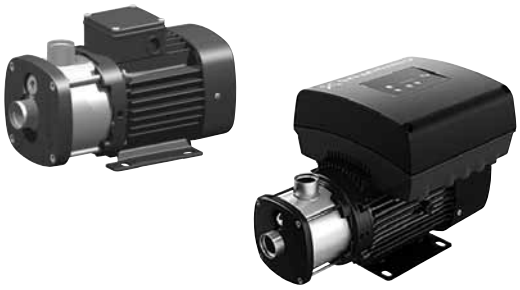

TM04 3509 4508 - TM06 6197 0816

Fig. 8 CM and CME pumps

CM and CME pumps present the following features and benefits:

Compact design

Pump and motor are integrated in a compact and user-friendly design. The pump is fitted to a low-profile base plate, making it ideal for installation in systems where compactness is important.

Modular construction/customised solutions

The modular construction of the CM and CME pumps makes it easy to create many different variants based on standard factory parts. This means that it is possible to create pump variants that are customised for the application in question.

Energy-optimised pumps

CM and CME pumps are energy-optimised and comply with the EuP Directive (Commission Regulation (EC) No 547/2012) in which most pumps are classified/graduated in a new energy efficiency index (MEI). See also page 18.

Worldwide usage

- With different voltage and frequency combinations, the CM and CME product ranges cover markets worldwide.
- The CM and CME product ranges have been approved and are marked for worldwide usage. See *Approvals and markings* on page 33.

High reliability

New state-of-the-art shaft-seal design and materials offer these benefits:

- high wear resistance and long operating life
- improved sticking and dry-running capabilities.

The pumps are less sensitive to impurities in the pumped liquid than similar pumps of the canned-rotor type.

Easy installation and commissioning

- A Quick Guide supplied with the CM pump enables easy installation and commissioning. Detailed multilingual installation and operating instructions are available for each pump.
- An installation indicator fitted to three-phase CM pumps makes it easy to see if the electrical connection of the motor is correct. Based on the motor cooling air, it indicates the direction of rotation of the motor.

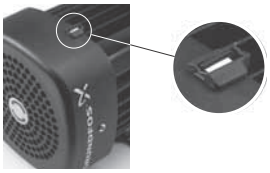

TM05 0870 1811

Fig. 9 Installation indicator

Service-friendly

- Service was in mind during the development.
- No special service tools required.
- Spare parts in stock for quick delivery.
- Service parts available as kits, single parts or bulks.
- Service instructions and video make it simple to disassemble and assemble the pump.
- Service kit instructions available where estimated necessary.

Additional features and benefits for self-priming pumps

The CM self-priming pump can create a suction lift of up to 8 metres in less than 5 minutes when installed and commissioned correctly.

- The pump is available in stainless steel 1.4301 with EPDM or Viton O-rings.
- The pump is available for single-phase operation as standard and for three-phase operation on request.

Wide performance range

The CM and CME pumps can be used in a wide range of applications, such as the following:

- washing and cleaning
- water treatment
- temperature control
- pressure boosting
- chemical industry
- pharmaceutical industry.

Product range in Grundfos Product Center (http://product-selection.grundfos.com/).

Low noise level

The CM and CME pumps offer very silent operation.

High-performance hydraulics

Pump efficiency is maximised by the optimised hydraulics and carefully crafted production technology.

Electrocoated cast-iron parts

- Optimised corrosion resistance
- better efficiency because of smooth surfaces.

Customised solutions

It is possible to create many different variants of the CM and CME pumps. For further information, see *Customisation* on page 133.

- Motor adaptation
- pump modifications.

Grundfos motor

Grundfos motors are remarkably silent and highly efficient.

Grundfos motors are available with integrated frequency converter designed for speed-controlled operation.

Data and literature about the CM and CME pumps

All literature and technical data related to CM and CME pumps are available online in Grundfos Product Center (http://product-selection.grundfos.com/).

5. Identification

Example CM 10 - 3 A - R - I - E - A V B E F - A - A - N

Type range

CM: Centrifugal Modular

CME: Centrifugal Modular with integrated frequency converter

Rated flow rate

Rated flow rate at 50 Hz [m^3/h]

Number of impellers

Pump version

A: Basic version

B: Oversize motor (one kW size larger)

D: Special nameplate

E: Pumps with certificates/approvals

N: CME pump with pressure sensor

P: Undersize motor (one kW size smaller)

T: Oversize motor (two kW sizes larger)

O: Self-priming version (maximum suction lift 8 metres)

S: Self-priming version (maximum suction lift 4 metres)

X: Special pump

Note: Two letters symbolise that two parameters have been combined.

Pipe connection

C: Tri-Clamp®

F: DIN/ANSI/JIS flange

P: Victaulic® coupling

R: Whitworth thread Rp (ISO 7/1)

S: Internal NPT thread

Materials in contact with pump media

A:	Inlet and outlet parts	EN-GJL-200
	Pump shaft	EN 1.4301/AISI 304
	Impellers/chambers	EN 1.4301/AISI 304
G:	Sleeve	EN 1.4401/AISI 316
	Pump shaft	EN 1.4401/AISI 316
	Impellers/chambers	EN 1.4401/AISI 316
I:	Sleeve	EN 1.4301/AISI 304
	Pump shaft	EN 1.4301/AISI 304
	Impellers/chambers	EN 1.4301/AISI 304
X:	Special version	

Rubber parts in pump (excluding neck ring and shaft seal)

E: EPDM (ethylene propylene)

K: FFKM (perflour)

V: FKM (flour)

Note: Gaskets between chambers of cast-iron versions are always made of Klingersil C-4430 0.5

Shaft seal

A: O-ring seal with fixed driver

R: O-ring seal with fixed driver and reduced seal face

Material of rotating seal face

Q: Silicon carbide (SIC)

V: Aluminium oxide (Al203)

U: Tungsten carbide

Material of stationary seal face

B: Carbon, resin-impregnated

Q: Silicon carbide (SIC)

U: Tungsten carbide

Material of secondary seal

E: EPDM (ethylene propylene)

K: FFKM (perflour)

V: FKM (flour)

Supply voltage

A: 1 x 220 V, 60 Hz

B: 1 x 115/230 V, 60 Hz, with flying wire

B1: 1 x 115/230 V, 60 Hz, with terminal board

B2: 1 x 230 V, 60 Hz, with terminal board and thermal switch

C: 1 x 220-240 V, 50 Hz, with terminal board and thermal switch

E: 3 x 208-230/440-480 V, 60 Hz, with flying wire

E1: 3 x 208-230/440-480 V, 60 Hz, with terminal board

F: 3 x 220-240/380-415 V, 50 Hz

G: 3 x 200/346 V, 50 Hz; 200-220/346-380 V, 60 Hz

H: 3 x 575 V, 60 Hz

J: 3 x 380-415 V, 50 Hz; 440-480 V, 60 Hz

O: 3 x 220-240/380-415 V, 50 Hz; 3 x 220-255/380-440 V, 60 Hz

S: 3 x 380-500 V, 50/60 Hz (E-motor)

T: 3 x 440-480 V, 50/60 Hz (E-motor)

U: 1 x 200-240 V, 50/60 Hz (E-motor)

V: 3 x 200-240 V, 50/60 Hz (E-motor)

X: Special voltage

Motor information

A: Standard motor (IP55)

B: Phase-insulated motor for use with frequency converter

C: Condensing environments

D: Pt100 in stator

E: Angular contact bearing

F: Motor heater

G: Three-phase motor with overload protection

H: Single-phase motor with no protection

I: Radio communication not available

J: IPX5

Mains plug

A: Prepared for cable glands

B: Harting plug

C: With cable

D: Cable gland included

Sensor

N: No sensor

Note: The type key cannot be used for ordering as not all combinations are possible.

6. Product range

CM, CME

Pump type	50 Hz			60 Hz			Shaft seal			Mains-operated motor									Electronically speed-controlled motor			
										50 Hz		60 Hz				50/60 Hz						
	Material			Material						Voltage [V]		Voltage [V]				Voltage [V]			Voltage [V]			
	Cast iron EN-GJL-200 (CM-A)	Stainless steel EN 1.4301/AISI 304 (CM-I)	Stainless steel EN 1.4401/AISI 316 (CM-G)	Cast iron EN-GJL-200 (CM-A)	Stainless steel EN 1.4301/AISI 304 (CM-I)	Stainless steel EN 1.4401/AISI 316 (CM-G)	AVBE, AVBV	AQQE, AQQV, AQBE, AQBV, AQQK, AUQE AQQV, AQBV	RUUE, RUUV	1 x 220-240 V (supply voltage C)	3 x 220-240/380-415 V (supply voltage F)	1 x 220 V (supply voltage A)	1 x 115/230 V (supply voltage B/B1)[4]	1 x 230 V (supply voltage B2)[4]	3 x 208-230/440-480 V (supply voltage E/E1)[4]	3 x 575 V (supply voltage H)	3 x 220-240/380-415 V, (50 Hz) / 3 x 220-255/380-440 V, (60 Hz) (supply voltage O)	3 x 380-415 V, (50 Hz) / 3 x 440-480 V, (60 Hz) (supply voltage J)	3 x 200 V/346 V, (50 Hz) / 3 x 200-220/346-380 V, (60 Hz) (supply voltage G)	3 x 200-240 V, 50/60 Hz (supply voltage V)	3 x 380-500 V, (50/60 Hz) (supply voltage S)	3 x 440-480 V, (50/60 Hz) (supply voltage T)	1 x 200-240 V, (50/60 Hz) (supply voltage U)
CM 1-2	•	•	•	•	•	•	•	•	•	•	•	•	•	•	•	•	•	•	•	•	•	•
CM 1-3	•	•	•	•	•	•	•	•	•	•	•	•	•	•	•	•	•	•	•		•	•
CM 1-4	•	•	•	•	•	•	•	•	•	•	•	•	•	•	•	•	•	•	•		•	•
CM 1-5	•	•	•	•	•	•	•	•	•[2]	•	•	•	•	•	•	•	•	•	•	•	•	•
CM 1-6	•	•	•		•	•	•	•	•[2]	•	•	•	•	•	•	•	•	•	•	•	•	•
CM 1-7	•	•	•		•	•	•	•		•	•	•	•	•	•	•	•	•	•	•	•	•
CM 1-8	•	•	•		•	•	•[2]	•		•	•	•	•	•	•	•	•	•	•	•	•	•
CM 1-9		•	•		•	•	•[2]	•		•	•	•	•	•	•	•	•	•	•	•	•	•
CM 1-10		•	•				•[2]	•		•	•											
CM 1-11		•	•					•[3]		•	•											
CM 1-12		•	•					•[3]		•	•											
CM 1-13		•	•					•[3]		•	•											
CM 1-14		•	•					•[3]		•	•											
CM 3-2	•	•	•	•	•	•	•	•	•	•	•	•	•	•	•	•	•	•	•		•	•
CM 3-3	•	•	•	•	•	•	•	•	•	•	•	•	•	•	•	•	•	•	•	•	•	•
CM 3-4	•	•	•	•	•	•	•	•	•	•	•	•	•	•	•	•	•	•	•	•	•	•
CM 3-5	•	•	•	•	•	•	•	•	•[2]	•	•	•	•	•	•	•	•	•	•	•	•	•
CM 3-6	•	•	•		•	•	•	•	•[2]	•	•	•	•	•	•	•	•	•	•	•	•	•
CM 3-7	•	•	•		•	•	•	•		•	•	•	•	•	•	•	•	•	•	•	•	•
CM 3-8	•	•	•		•	•	•[2]	•		•	•	•	•	•	•	•	•	•	•	•	•	
CM 3-9		•	•		•	•	•[2]	•		•	•				•	•	•	•	•	•	•	
CM 3-10		•	•				•[2]	•		•	•											
CM 3-11		•	•					•[3]		•	•											
CM 3-12		•	•					•[3]		•	•											
CM 3-13		•	•					•[3]		•	•											
CM 3-14		•	•					•[3]		•	•											

1) On request.

2) Neither suitable for 60 Hz mains-operated pumps, nor for CME pumps running at 100 % speed.

3) Not suitable for pumping liquids at temperatures above 90 °C.

4) Pumps with supply voltages B and E are supplied for wire connection without a terminal board inside the terminal box (flying wires).
Pumps with supply voltages B1, B2 and E1 are supplied with a terminal board inside the terminal box.

5) Only available with IE2-compliant motors and cannot be exported to the USA.

Pump type	50 Hz			60 Hz			Shaft seal			Mains-operated motor										Electronically speed-controlled motor			
										50 Hz		60 Hz				50/60 Hz							
	Material			Material						Voltage [V]		Voltage [V]				Voltage [V]				Voltage [V]			
	Cast iron EN-GJL-200 (CM-A)	Stainless steel EN 1.4301/AISI 304 (CM-I)	Stainless steel EN 1.4401/AISI 316 (CM-G)	Cast iron EN-GJL-200 (CM-A)	Stainless steel EN 1.4301/AISI 304 (CM-I)	Stainless steel EN 1.4401/AISI 316 (CM-G)	AVBE, AVBV	AQQE, AQQV, AQBE, AQBV, AQQK, AUQE AQQV, AQBV	RUUE, RUUV	1 x 220-240 V (supply voltage C)	3 x 220-240/380-415 V (supply voltage F)	1 x 220 V (supply voltage A)	1 x 115/230 V (supply voltage B/B1)[4]	1 x 230 V (supply voltage B2)[4]	3 x 208-230/440-480 V (supply voltage E/E1)[4]	3 x 575 V (supply voltage H)	3 x 220-240/380-415 V, (50 Hz) / 3 x 220-255/380-440 V, (60 Hz) (supply voltage O)	3 x 380-415 V, (50 Hz) / 3 x 440-480 V, (60 Hz) (supply voltage J)	3 x 200 V/346 V, (50 Hz) / 3 x 200-220/346-380 V, (60 Hz) (supply voltage G)	3 x 200-240 V, 50/60 Hz (supply voltage V)	3 x 380-500 V, (50/60 Hz) (supply voltage S)	3 x 440-480 V, (50/60 Hz) (supply voltage T)	1 x 200-240 V, (50/60 Hz) (supply voltage U)
CM 5-2	•	•	•	•	•	•	•	•	•	•	•	•	•		•	•	•	•	•		•	•	•
CM 5-3	•	•	•	•	•	•	•	•	•	•	•	•	•		•	•	•	•	•		•	•	•
CM 5-4	•	•	•	•	•	•	•	•	•	•	•	•	•		•	•	•	•	•	•	•	•	•
CM 5-5	•	•	•	•	•	•	•	•	•[2]	•	•		•		•	•	•	•	•	•	•	•	
CM 5-6	•	•	•		•	•	•	•	•[2]	•	•				•	•	•	•	•	•	•	•	
CM 5-7	•	•	•		•	•	•			•	•				•	•	•	•	•	•	•	•	
CM 5-8	•	•	•		•	•	•[2]	•		•	•				•	•	•	•	•	•	•	•	
CM 5-9		•	•				•[2]	•		•	•												
CM 5-10		•	•				•[2]	•		•	•												
CM 5-11		•	•					•[3]		•	•												
CM 5-12		•	•					•[3]			•												
CM 5-13		•	•					•[3]			•												
CM 10-1	•	•	•	•	•	•	•	•	•	•	•	•	•		•	•	•	•	•	•	•	•	•
CM 10-2	•	•	•	•	•	•	•	•	•	•	•				•	•	•	•	•	•	•	•	
CM 10-3	•	•	•	•	•	•	•	•	•[2]	•	•				•	•	•	•	•	•	•	•	
CM 10-4	•	•	•		•	•	•	•			•				•	•	•	•	•	•	•	•	
CM 10-5	•	•	•		•	•	•[2]	•			•				•	•	•	•	•	•	•	•	
CM 10-6		•	•				•[2]	•			•												
CM 10-7		•	•					•[3]			•												
CM 10-8		•	•					•[3]			•												
CM 15-1	•	•	•	•	•	•	•	•	•	•	•				•	•	•	•	•	•	•	•	
CM 15-2	•	•	•	•	•	•	•	•	•	•	•				•	•	•	•	•	•	•	•	
CM 15-3	•	•	•	•	•	•	•	•	•[2]		•				•	•	•	•	•	•	•	•	
CM 15-4	•	•	•				•[2]	•			•												
CM 25-1	•	•	•	•	•	•	•	•	•	•	•				•	•	•	•	•	•	•	•	
CM 25-2	•	•	•	•	•	•	•	•	•		•				•	•	•	•	•	•	•	•	
CM 25-3	•	•	•				•[2]	•	•[2]		•												
CM 25-4	•	•	•				•[2]	•			•												

1) On request.

2) Neither suitable for 60 Hz mains-operated pumps, nor for CME pumps running at 100 % speed.

3) Not suitable for pumping liquids at temperatures above 90 °C.

4) Pumps with supply voltages B and E are supplied for wire connection without a terminal board inside the terminal box (flying wires). Pumps with supply voltages B1, B2 and E1 are supplied with a terminal board inside the terminal box.

5) Only available with IE2-compliant motors and cannot be exported to the USA.

CM self-priming

Pump type	Max. suction lift		Material	Shaft seal		Supply voltage									
						Mains-operated motor									
						50 Hz		60 Hz					50/60 Hz		
	4 metres	8 metres	Stainless steel EN 1.4301/AISI 304 (CM-I)	AVBE/AQQE	AVBV/AQQV	1 x 220-240 V (supply voltage C)	3 x 220-240/380-415 V (supply voltage F)	1 x 220 V (supply voltage A)	1 x 115/230 V (supply voltage B/B1)	1 x 115/230 V (supply voltage B2)	3 x 208-230/440-480 V (supply voltage E/E1)	3 x 575 V (supply voltage H)	3 x 220-240/380-415 V (50 Hz) / 3 x 220-255/380-440 V (60 Hz) (supply voltage O)	3 x 380-415 V (50 Hz) / 3 x 440-480 V (60 Hz) (supply voltage J)	3 x 200 V/346 V (50 Hz) / 3 x 200-220/346-380 V (60 Hz) (supply voltage G)
CM 1-3	•	-	•	•	❍	•	❍	•	❍	❍	❍	❍	❍	❍	❍
CM 1-4	•	-	•	•	❍	•	❍	•	❍	❍	❍	❍	❍	❍	❍
CM 1-5	•	-	•	•	❍	•	❍	❍	❍	❍	❍	❍	❍	❍	❍
CM 1-6	•	-	•	•	❍	•	❍	❍	❍	❍	❍	❍	❍	❍	❍
CM 3-3	•	•	•	•	❍	•	❍	•	❍	❍	❍	❍	❍	❍	❍
CM 3-4	•	•	•	•	❍	•	❍	•	❍	❍	❍	❍	❍	❍	❍
CM 3-5	•	•	•	•	❍	•	❍	❍	❍	❍	❍	❍	❍	❍	❍
CM 3-6	•	•	•	•	❍	•	❍	❍	❍	❍	❍	❍	❍	❍	❍
CM 5-3	•	•	•	•	❍	•	❍	•	❍	❍	❍	❍	❍	❍	❍
CM 5-4	•	•	•	•	❍	•	❍	•	❍	❍	❍	❍	❍	❍	❍
CM 5-5	•	•	•	•	❍	•	❍	❍	❍	❍	❍	❍	❍	❍	❍
CM 5-6	•	•	•	•	❍	•	❍	-	-	-	❍	❍	❍	❍	❍
CM 5-7	•	•	•	•	❍	•	❍	-	-	-	❍	❍	❍	❍	❍

• Available as standard
❍ Available on request
- Not available

7. Performance range

CM, 50 Hz

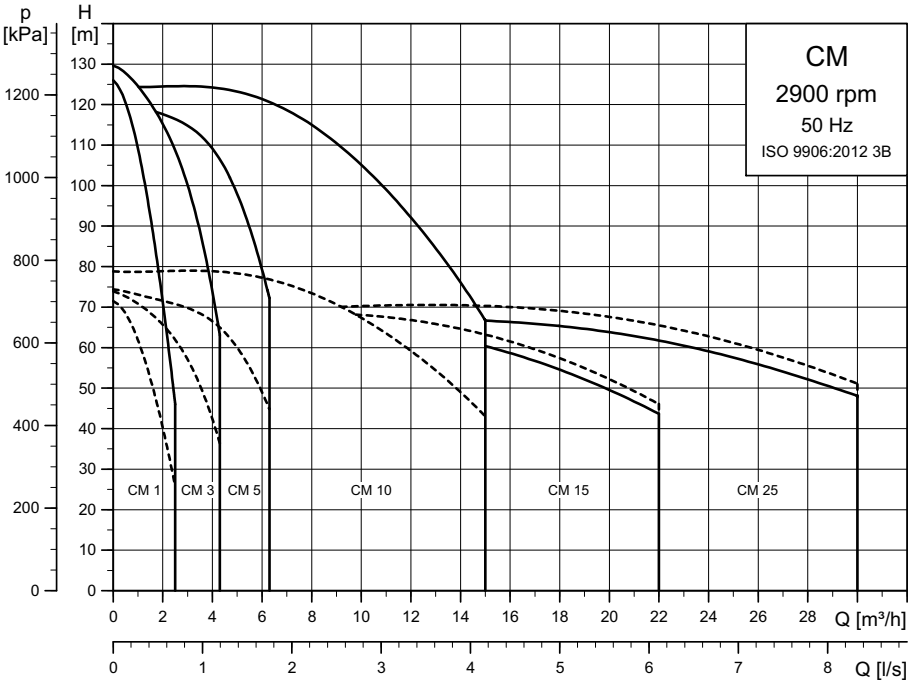

TM04 3340 4616

CM-A
CM-I/G

CM, 60 Hz

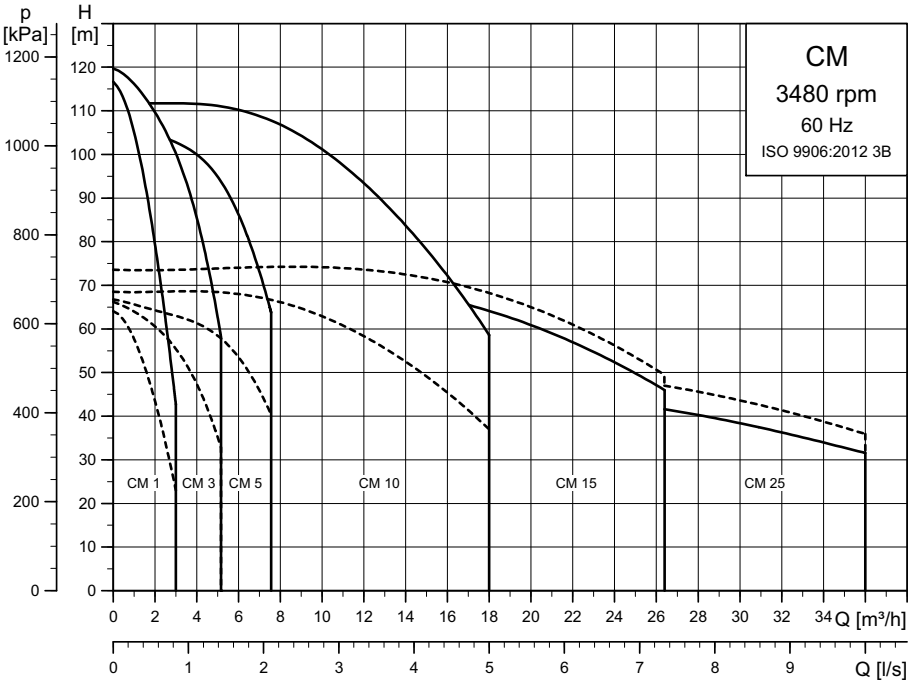

TM04 3369 4616

CM-A
CM-I/G

CM self-priming, 50 Hz

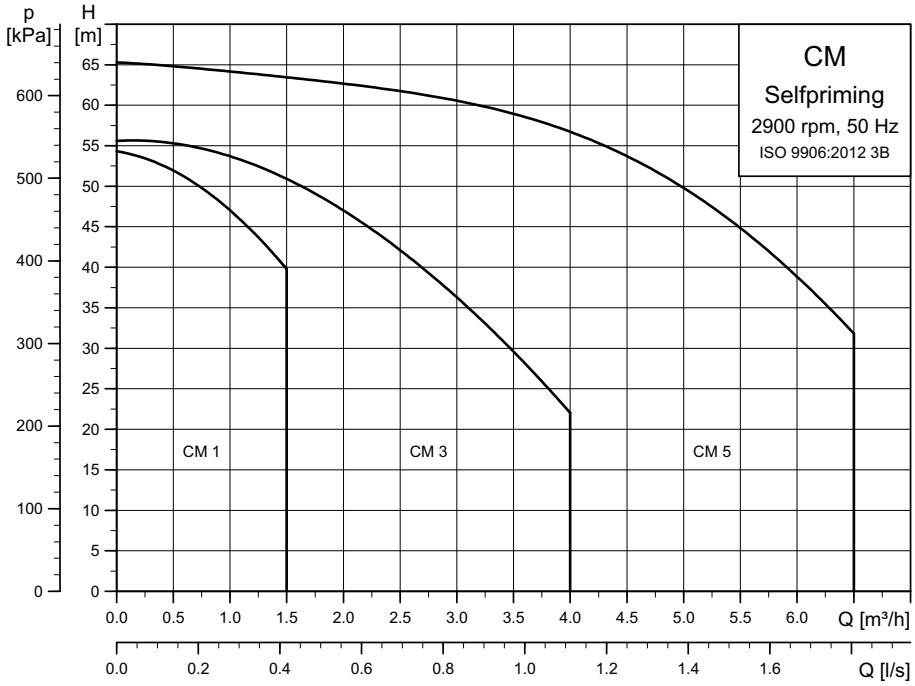

TM05 8834 4616

CM self-priming, 60 Hz

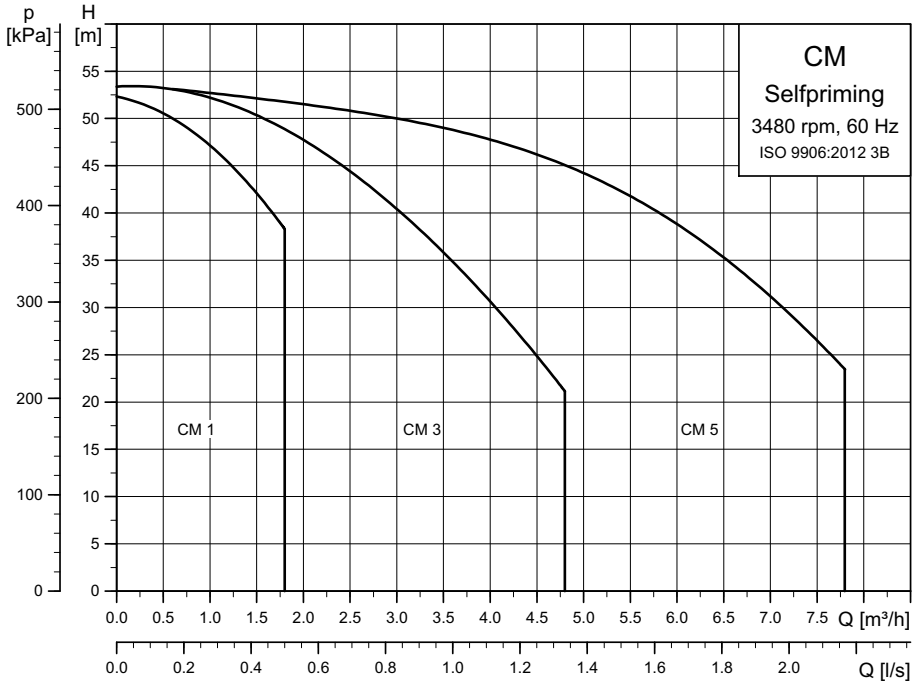

TM05 8835 4616

CME, 50/60 Hz

Supply voltages S, T, U

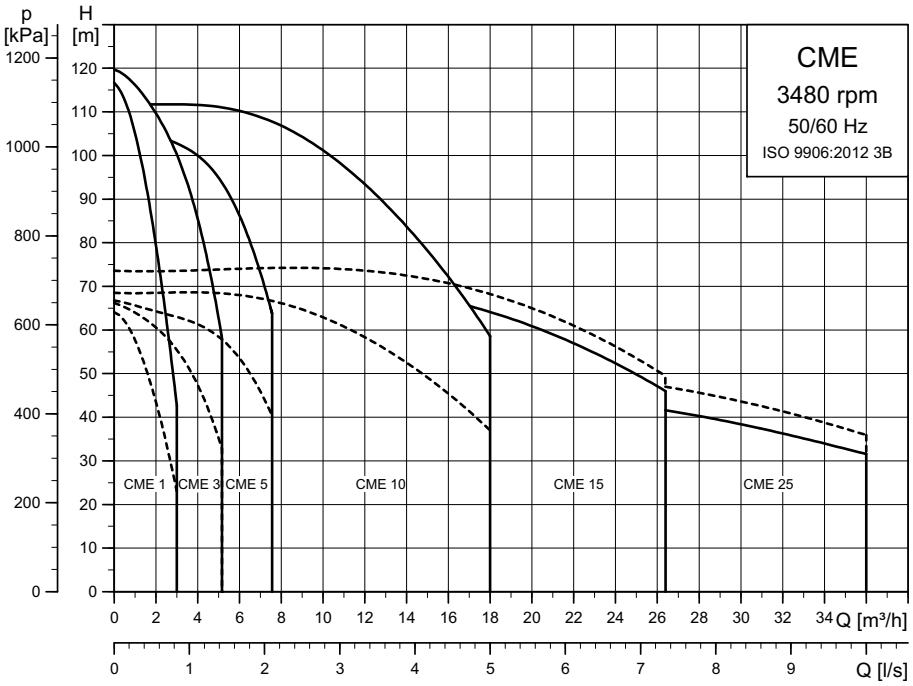

TM04 3568 5112

EuP ready

The CM, CME pumps are energy-optimised and comply with the EuP Directive (Commission Regulation (EC) No 547/2012) which has been effective since 1 January 2013. As from this date, all pumps will be classified/graduated in a new energy efficiency index (MEI).

Minimum efficiency index

Minimum efficiency index (MEI) means the dimensionless scale unit for hydraulic pump efficiency at best efficiency point (BEP), part load (PL) and overload (OL). The Commission Regulation (EU) sets efficiency requirements to MEI ≥ 0.40 as from 1 January 2015. An indicative benchmark for best-performing water pump available on the market as from 1 January 2013 is determined in the Regulation.

- The benchmark for most efficient water pumps is MEI ≥ 0.70.
- The efficiency of a pump with a trimmed impeller is usually lower than that of a pump with the full impeller diameter. The trimming of the impeller will adapt the pump to a fixed duty point, leading to reduced energy consumption. The minimum efficiency index (MEI) is based on the full impeller diameter.
- The operation of this water pump with variable duty points may be more efficient and economic when controlled, for example, by the use of a variable-speed drive that matches the pump duty to the system.
- Information on benchmark efficiency is available at http://europump.eu/efficiencycharts.

Pump type	MEI	Efficiency at best efficiency point [%]
CM, CME 1 A	0.70	37.1
CM, CME 1 I/G	0.68	36.4
CM, CME 3 A	0.70	50.6
CM, CME 3 I/G	0.70	49.3
CM, CME 5 A	0.70	53.3
CM, CME 5 I/G	0.70	52.1
CM, CME 10 A	0.70	62.2
CM, CME 10 I/G	0.52	57.9
CM, CME 15 A	0.70	67.5
CM, CME 15 I/G	0.59	63.1
CM, CME 25 A	0.70	68.3
CM, CME 25 I/G	0.41	63.8

8. Operating conditions

Ambient temperature

The maximum ambient temperature depends on the liquid temperature. The table below shows the temperature limits of CM and CME pumps.

Note that the maximum permissible liquid temperature for CM-A and CME-A is 90 °C.

Minimum ambient temperature [°C]	Maximum ambient temperature [°C]	Liquid temperature [°C]	Pump type		
			CM	CM self-priming	CME[1]
-20 °C[2]	55 °C	60 °C	•	•	-
	55 °C	90 °C	•	-	-
	50 °C	100 °C[1]	•	-	•
	45 °C	110 °C[1]	•	-	•
	40 °C	120 °C[1]	•	-	•

1) CME (supply voltages S, T, U)

2) Pumps for ambient temperatures below -20 °C are available on request.

CM mains-operated motors

If the ambient temperature for CM pumps exceeds 55 °C, the motor must not be fully loaded due to the risk of overheating.

In such cases, it may be necessary to derate the motor output or use an oversize motor with higher rated output. The CM pumps can be derated in relation to ambient temperature without consequence. Contact Grundfos for further information.

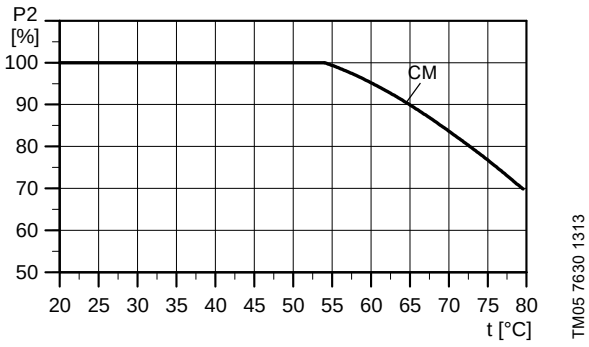

Fig. 10 Derating of CM pump, in relation to ambient temperature

CME speed-controlled motors

The electronics incorporated in the CME pumps are limiting the maximum ambient temperature. This means that the maximum ambient temperature must not be exceeded. If the pump is operated at temperatures exceeding the maximum ambient temperature, the motor life will be reduced.

Maximum ambient temperature

CME, supply voltages S, T, U:

50 °C.

CME 0.37 to 7.5 kW, supply voltage V:

40 °C.

Note: Note that you can operate the new-generation CME pumps at 60 °C as well. In such case, contact Grundfos for further information.

Storage and transport temperature

-30 to +60 °C.

Maximum operating pressure and permissible liquid temperature

The maximum operating pressure and the permissible liquid temperature depend on the pump material, the type of shaft seal and the pumped liquid.

CM, CME pumps

Material variant	Shaft seal	Permissible liquid temperature[1] [°C]	Maximum operating pressure [bar]
Cast iron (EN-GJL-200)	AVBx	-20 - +40 +41 - +90	10 6
	AQQx/AQBx	-20 - +90	10
	RUUx	-20 - +60	6
Stainless steel (EN 1.4301 / AISI 304)	AVBx	-20 - +40 +41 - +90	10 6
	AQQx/AQBx	-20[2] - +90 +91 - +120	16 10
	AUQX	-20[2] - +90	16
	RUUx	-20 - +60	6
Stainless steel (EN 1.4401 / AISI 316)	AVBx	-20 - +40 +41 - +90	10 6
	AQQx/AQBx	-20[2] - +90 +91 - +120	16 10
	AUQX	-20[2] - +90	16
	RUUx	-20 - +60	6

CM self-priming pumps

Material variant	Shaft seal	Permissible liquid temperature[1] [°C]	Max. operating pressure [bar]
Stainless steel (EN 1.4301 / AISI 304)	AVBx	0-40 41-60	10 6
	AQQx	0-60	16

1) At liquid temperatures below 0 °C (32 °F), higher motor outputs may be needed due to increased viscosity, for instance if glycol has been added to the water.

2) CM-I, -G and CME-I, -G pumps for liquid temperatures below -20 °C are available on request. Please contact Grundfos.

Maximum liquid-temperature-change gradient

Cast-iron pumps (CM-A, CME-A) must not be used in applications where rapid temperature changes of more than 45 °C may occur. If exposed to such rapid temperature changes, a cast-iron pump may leak.

Under such operating conditions, we recommend to use stainless-steel pumps (CM-I, -G and CME-I, -G).

Liquid temperature range

O-ring material/liquid	Permissible liquid temperature [°C]
EPDM	-20 - 120
FFKM	0-120
FKM/liquids containing water	-20 - 90
FKM/oil without water	-20 - 120

Frequency of starts and stops

Maximum 100 per hour.

Operation in condensing environments

If the liquid temperature becomes lower than the ambient temperature, condensation may form in the motor during inactivity. In such cases, a motor suited for condensing environments must be used, for example, an IPX5 motor, available from Grundfos.

Alternatively, you can open the bottom drain hole in the motor flange by removing the plug. The enclosure class of the motor is then reduced to IPX5. Removing the plug helps prevent condensation in the motor as it will make the motor self-venting and allow water and humid air to escape.

When installing CM and CME pumps outdoors, provide them with a suitable cover to protect them from buildup of condensed water. See fig. 11.

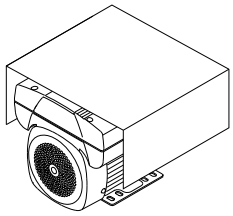

TM04 5799 4009

Fig. 11 CME pump with protective cover

Motors in outdoor installations radiate heat to and absorb heat from their surroundings. By day, a stopped motor will absorb more heat than it radiates; by night, especially clear nights, radiation from a stopped motor may be so high that the surface temperature drops a few degrees below the air temperature. This may cause the formation of condensation. Condensation on the inner surfaces may result in moisture on the electronic components, including the printed-circuit boards, which means a risk of failure or even destruction of the motor and electronics.

Furthermore, the cover protects the motor against direct sunlight.

Environmental rating

Three-phase CME motors hold a UL NEMA 3R environmental rating.

Single-phase CME motors have not been tested against the UL NEMA environmental rating.

All motors are IP55.

Operating range of the shaft seal

The operating range of the shaft seal depends on the operating pressure, the type of shaft seal and the liquid temperature.

The curve in fig. 12 shows which shaft seals are suitable at a given temperature and a given pressure. The curve applies to clean water. For ultra pure water with a conductivity lower than 2 µS/cm, use an AUQE instead of an AQQE seal face combination.

For other pumped liquids, concentrations and temperatures, please visit the Grundfos Product Center liquids section >

http://product-selection.grundfos.com/liquids.html

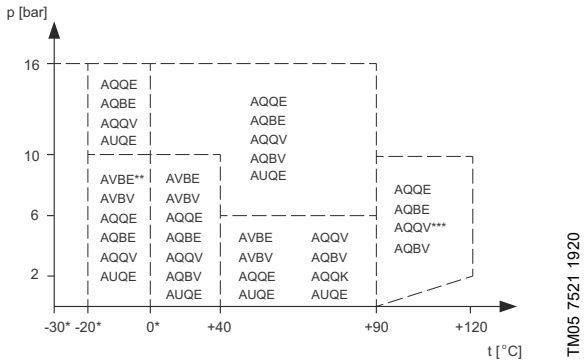

Fig. 12 Curve for the selection of AQQx, AQBx and AVBx shaft seals

* Antifreeze must be added at liquid temperatures below 0 °C.
** CM and CME pumps for liquid temperatures below -20 °C are available on request. Please contact Grundfos.
*** AQQV/AQBV above 90 °C only in media not containing water.

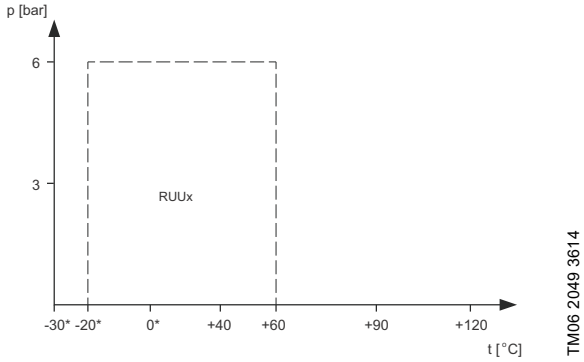

Fig. 13 Curve for RUUx shaft seal

Shaft seal run-in

The seal faces are lubricated by the pumped liquid, meaning that there may be a certain amount of leakage from the shaft seal.

When the pump is started up for the first time, or when a new shaft seal is installed, a certain run-in period is required before the leakage is reduced to an acceptable level. The time required for this depends on the operating conditions, that is every time the operating conditions change, a new run-in period will be started.

Under normal conditions, the leaking liquid will evaporate. As a result, no leakage will be detected.

However, liquids such as kerosene will not evaporate. The leakage may therefore be seen as a shaft-seal failure.

Viscosity

Pumping liquids with densities or kinematic viscosities higher than those of water will cause a considerable pressure drop, a drop in the hydraulic performance and a rise in the power consumption.

For instance at liquid temperatures below 0 °C (32 °F), higher motor outputs may be needed due to increased viscosity if glycol has been added to the water.

In such situations, the pump must be fitted with a larger motor. If in doubt, contact Grundfos or visit Grundfos Product Center >

http://product-selection.grundfos.com/.

Sound pressure level

The sound pressure values in the table below apply for CM pumps. If the motor output (P2) for a given pump is not found in the table, use the nearest rounded-up value. The values for sound pressure include a tolerance of 3 dB(A) according to EN ISO 4871.

P_2 [kW]	50 Hz	60 Hz
	L_{pA} [dB(A)]	L_{pA} [dB(A)]
0.37	50	54
0.55	49	53
0.75	49	54
1.1	54	49
1.5	54	59
2.2	56	60
3.0	55	60
4.0	59	64
5.5	59	64
7.5	60	65

The audible noise from CM pumps is primarily noise from the motor fan. The selection of CME pumps will reduce the noise at partial load, as the motor and, consequently, the motor fan run at a lower speed. Possible flow noise from control valves is also reduced at partial load in the case of the CME pump.

Minimum inlet pressure, NPSH

Grundfos recommends that you calculate the inlet pressure "H" in these situations:

- The liquid temperature is high.
- The flow rate is significantly higher than the rated flow rate.
- Water is drawn from depths.
- Water is drawn through long pipes.
- Inlet conditions are poor.

To avoid cavitation, make sure that there is a minimum pressure on the inlet side of the pump. The maximum suction lift "H" in metres head can be calculated as follows:

$$H = p_b \times 10.2 - NPSH - H_f - H_v - H_s$$

p_b	=	Barometric pressure in bar. (Barometric pressure can be set to 1 bar). In closed systems, p_b indicates the system pressure in bar.
NPSH	=	Net Positive Suction Head in metres head. (To be read from the NPSH curve at the highest flow rate the pump will be delivering).
H_f	=	Friction loss in inlet pipe in metres head. (At the highest flow rate the pump will be delivering).
H_v	=	Vapour pressure in metres head. (To be read from the vapour pressure scale, "H_v" depends on the liquid temperature "T_m").
H_s	=	Safety margin = minimum 0.5 metres head.

If the "H" calculated is positive, the pump can operate at a suction lift of maximum "H" metres head.

If the "H" calculated is negative, an inlet pressure of minimum "H" metres head is required.

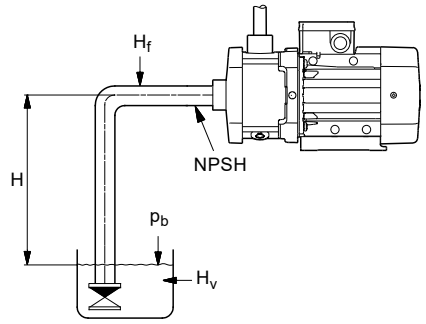

TM04 3487 4508

Fig. 14 Minimum inlet pressure (NPSH)

To avoid cavitation, never select a pump with a duty point too far to the right on the NPSH curve.

Always check the NPSH value of the pump at the highest possible flow rate.

Note that the NPSH must also be observed and calculated for CM self-priming pumps.

9. Installation

Installation altitude for CM

Installation altitude is the height above sea level of the installation site. Motors installed up to 3500 m above sea level can be loaded 100 %.

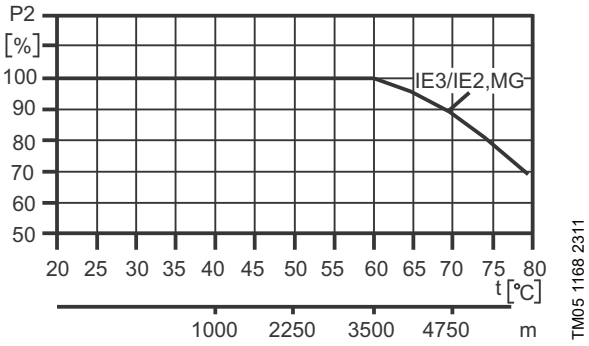

Fig. 15 Motor output power in relation to temperature and installation altitude

Installation altitude for CME

Installation altitude is the height above sea level of the installation site. Motors installed up to 1000 m above sea level can be loaded 100 %. The motors can be installed up to 3500 m above sea level.

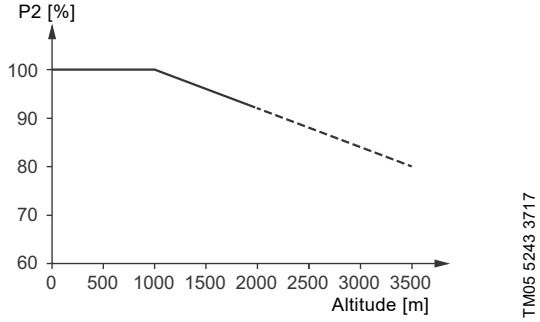

Fig. 16 Motor output power in relation to installation altitude

In order to maintain the galvanic isolation and ensure correct clearance according to EN 60664-1:2007, you must adapt the supply voltage to the altitude.

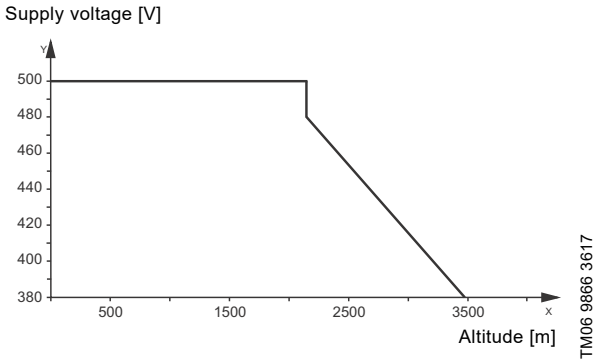

Fig. 17 Supply voltage for three-phase motor in relation to altitude

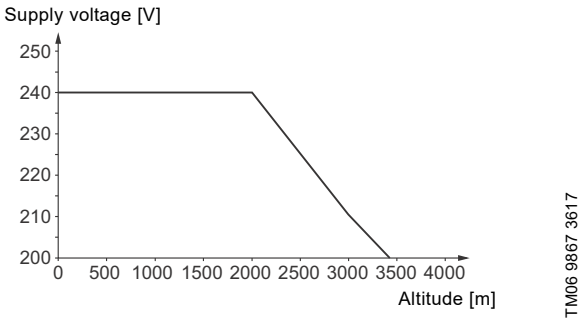

Fig. 18 Supply voltage for single-phase motor in relation to altitude

Installation of pump

The pump must be installed on a plane surface and fixed so that it cannot be displaced during startup and operation.

Installation of CM and CME pumps

The pump must be installed so that air pockets are avoided in the pump housing and pipes. Figure 19 shows the permissible pump positions.

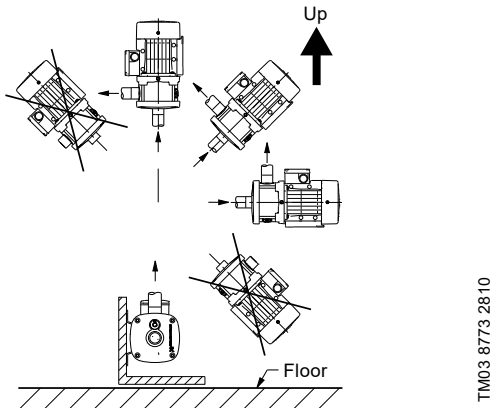

Fig. 19 Positions of CM and CME pumps

Installation of CM self-priming pumps

Install the pump so that the inlet is horizontal. Figure 20 shows the permissible pump positions.

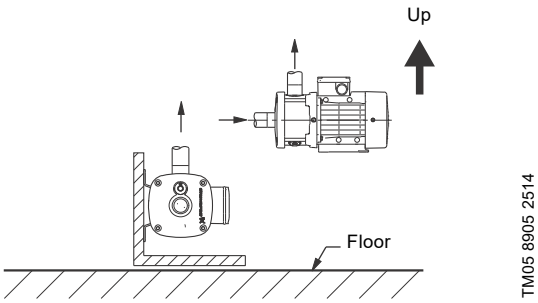

Fig. 20 Positions of CM self-priming pumps

Install the pump with easy access for inspection, maintenance and service.

Install the pump in a well-ventilated location.

10. Construction

Pump

The pumps have an axial inlet port and a radial outlet port and are mounted on a base plate.

All movable parts are made of stainless steel.

Self priming pumps are fitted with an internal water trap and an internal valve, both of which are mainly made of a composite material.

You find the sectional drawings on pages 26 to 28.

The pumps are available with mains-operated motors (CM pumps) and electronically speed-controlled motors (CME pumps).

All pumps incorporate a maintenance-free mechanical O-ring shaft seal with a fixed driver.

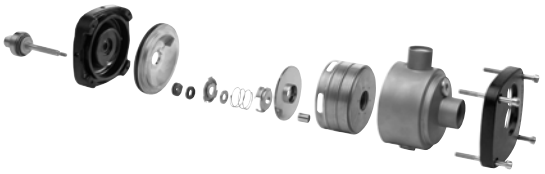

TM05 1130 2211

Fig. 21 CM and CME pump hydraulics

Motor

CM and CME pumps are fitted with totally enclosed, fan-cooled, 2-pole motors with principal dimensions to EN 50347. The motors have been developed especially for CM and CME pumps.

Electrical tolerances comply with EN 60034.

Single-phase CME pumps are available from 0.37 to 1.5 kW.

Three-phase CME pumps are available from 0.37 to 7.5 kW.

Soft starter

Soft starters are only to be used for three-phase motors.

Efficiency

Motors for CM and CME pumps comply with different energy-efficiency requirements throughout the world, for example the European Ecodesign.

For China, motors with CCC and CEL marking are available.

Generally, this means that all three-phase motors of 0.75 kW and up are IE3-compliant as standard.

MGE motors

The motor is energy efficiency class IE5 according to IEC 60034-30-2. In combination with the integrated frequency converter, the combined power drive system is efficiency class IES2 according to IEC 50598-2.

Electrical data

Insulation class	F
Enclosure class	IP55*
Supply voltages (tolerance ± 10 %)	**CM** 1 x 115/230 V, 60 Hz 1 x 220-240 V, 50 Hz 3 x 208-230/440-480 V, 60 Hz 3 x 220-240/380-415 V, 50 Hz 3 x 200/346 V, 50 Hz; 200-220/346-380 V, 60 Hz 3 x 575 V, 60 Hz 3 x 380-415 V, 50 Hz; 440-480 V, 60 Hz 3 x 220-240/380-415 V, 50 Hz 3 x 220-255/380-440 V, 60 Hz **CME** 1 x 200-240 V, 50/60 Hz 1 x 208-230 V, 50/60 Hz 3 x 200-240 V, 50/60 Hz 3 x 380-500 V, 50/60 Hz 3 x 440-480 V, 50/60 Hz

* IP55 is not recommended for operation in condensing environments.
For operation in such environments, see *Operation in condensing environments* on page 20.

Motor protection

Mains-operated motors (CM)

Single-phase motors, 1 x 115/230 V, 60 Hz, do not incorporate motor protection and must be connected to a motor-protective circuit breaker which can be manually reset. Set the motor-protective circuit breaker according to the rated current of the motor ($I_{1/1}$). See the nameplate.

Other single-phase motors have built-in current- and temperature-dependent motor protection in accordance with IEC 60034-11 and require no further motor protection. The motor protection reacts to both slow- and quick-rising temperatures. The motor protection is automatically reset.

Three-phase motors up to 3 kW must be connected to a motor-protective circuit breaker which can be manually reset. Set the motor-protective circuit breaker according to the rated current of the motor ($I_{1/1}$). See the nameplate. Motors with power ratings of 3 kW and up have built-in thermistors (PTC)*. The thermistors are designed according to DIN 44082. The motor protection reacts to both slow- and quick-rising temperatures.

* Applies only to supply voltages F, G and O. Motors for other supply voltages must be connected to a motor-protective circuit breaker as described for three-phase motors up to 3 kW.

Electronically speed-controlled motors (CME)

CME pumps require no external motor protection. The MGE motor incorporates thermal protection against steady overload and stalled condition (IEC 34-11).

Frequency converter operation

All three-phase motors can be connected to a frequency converter. Depending on the frequency converter type, this may cause increased acoustic noise from the motor. Furthermore, it may cause the motor to be exposed to detrimental voltage peaks.

Single-phase motors must not be connected to a frequency converter.

As standard MG 71- and MG 80-based motors have no phase insulation and must therefore be protected against voltage peaks higher than 650 V (peak value) between the supply terminals.

Note that MG 71- and MG 80-based motors with phase insulation are available on request.

The above disturbances, that is both increased acoustic noise and detrimental voltage peaks, can be eliminated by fitting an LC filter between the frequency converter and the motor.

For further information, please contact the frequency converter supplier or Grundfos.

Shaft seal

The shaft seal for the CM and CME pumps is of the O-ring type, which makes it very flexible when different types of O-rings and seal-face materials are needed. The shaft seal has a fixed seal driver which ensures a reliable rotation of all parts - even under the most extreme operating conditions.

Due to the special design of the shaft seal and the interfaces to the rest of the pump construction, the dry-running capabilities are improved significantly compared to most other similar shaft seals and pump types. Furthermore, improvements have been made to reduce the risk and effect of sticking. The shaft seal types available can be found in *Selection of CME pumps* on page 39 where the key parameters of selecting a shaft seal are also described.

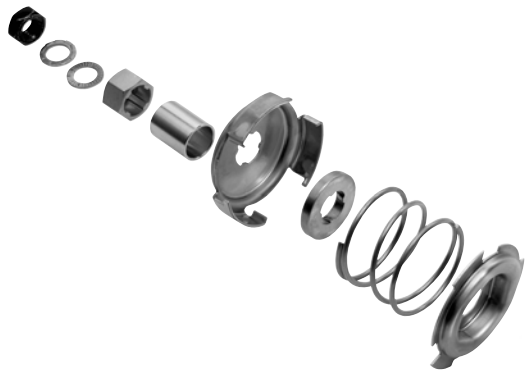

TM05 1131 2211

Fig. 22 Exploded view of a shaft seal

Note that the available shaft seals for CM and CME pumps are very robust and durable, but dry running must always be avoided.

Details regarding operating conditions for the shaft seal can be found in *Operating range of the shaft seal* on page 21.

Further information about the shaft seal can be found in the separate book covering shaft seals which can be ordered from Grundfos.

Title	Publication number
Mechanical shaft seals for pumps	97506935

CM, CME 1-A

(A = cast iron EN-GJL-200)

Sectional drawing

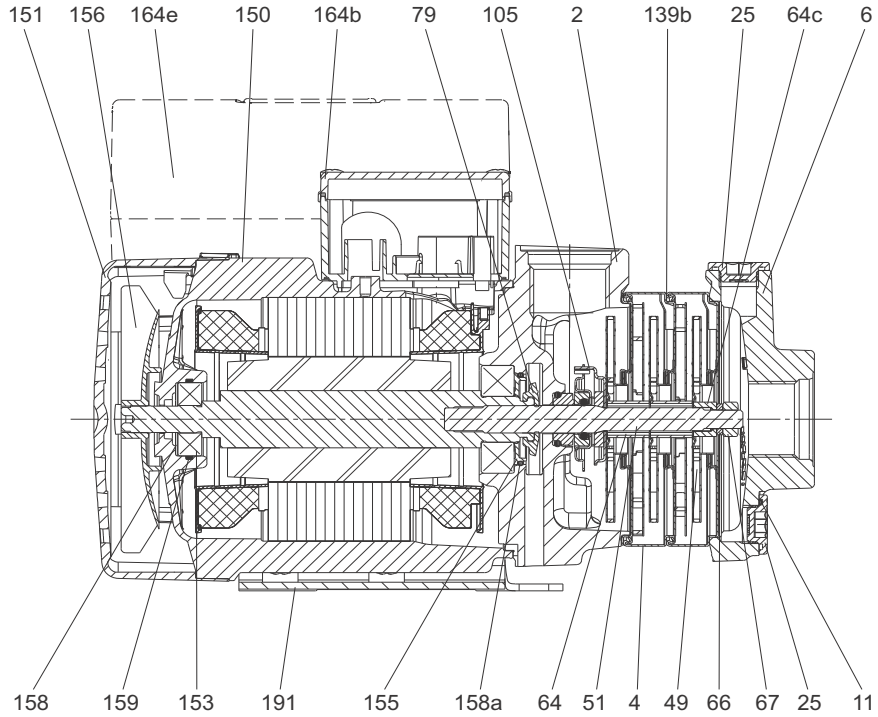

Fig. 23 CM, CME 1-3 with MG, MGE 71 motor

Components

Pos.	Component	Pos.	Component	Pos.	Component
2	Outlet part	64c	Clamp	153	Ball bearing
4	Chamber	66	Washer (NORD-LOCK)	155	Bearing cover plate
6	Inlet part	67	Nut	156	Fan
11	O-ring	79	Diverting disc	158	Corrugated spring
25	Plug	105	Shaft seal	158a	O-ring
49	Impeller	139b	Gasket	159	O-ring
51	Pump shaft	150	Stator housing	164b, 164e	Terminal box
64	Spacing pipe	151	Fan cover	191	Base plate

CM, CME 1-I and CM, CME 1-G

(I = EN 1.4301/AISI 304 and G = EN 1.4401/AISI 316)

Sectional drawing

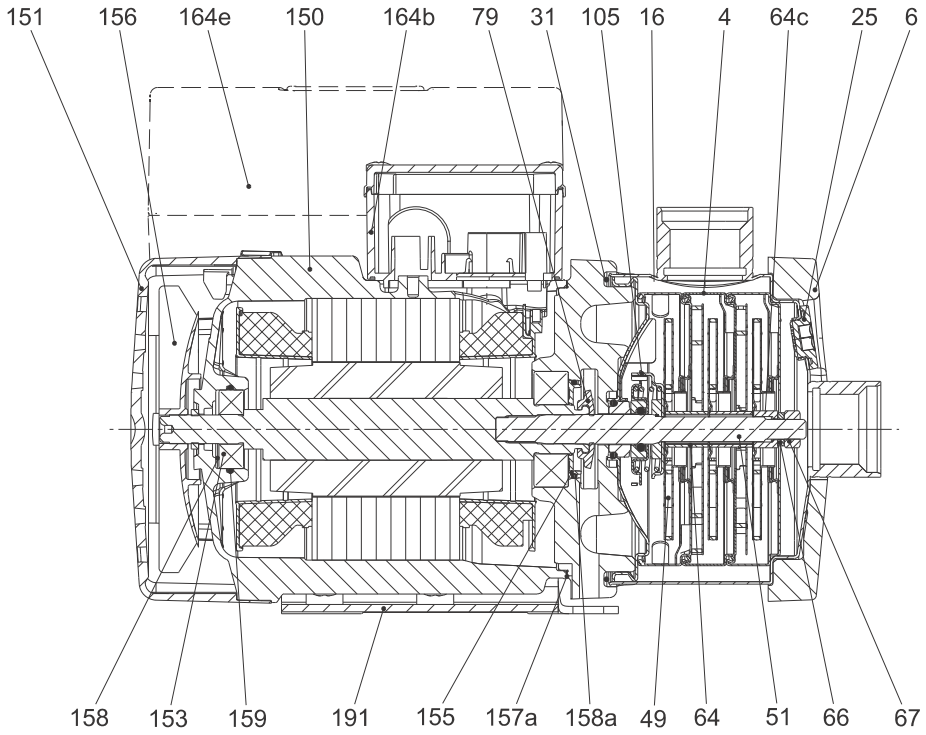

Fig. 24 CM, CME 1-3 with MG, MGE 71 motor

Components

Pos.	Component	Pos.	Component	Pos.	Component
4	Chamber	64c	Clamp	155	Bearing cover plate
6	Flange	66	Washer (NORD-LOCK)	156	Fan
16	Sleeve	67	Nut	157a	Gasket
25	Plug	79	Diverting disc	158	Corrugated spring
31	O-ring	105	Shaft seal	158a	O-ring
49	Impeller	150	Stator housing	159	O-ring
51	Pump shaft	151	Fan cover	164b, 164e	Terminal box
64	Spacing pipe	153	Ball bearing	191	Base plate

CM self-priming

(Stainless steel: I = EN 1.4301/AISI 304 and G = EN 1.4401/AISI 316)

Sectional drawing

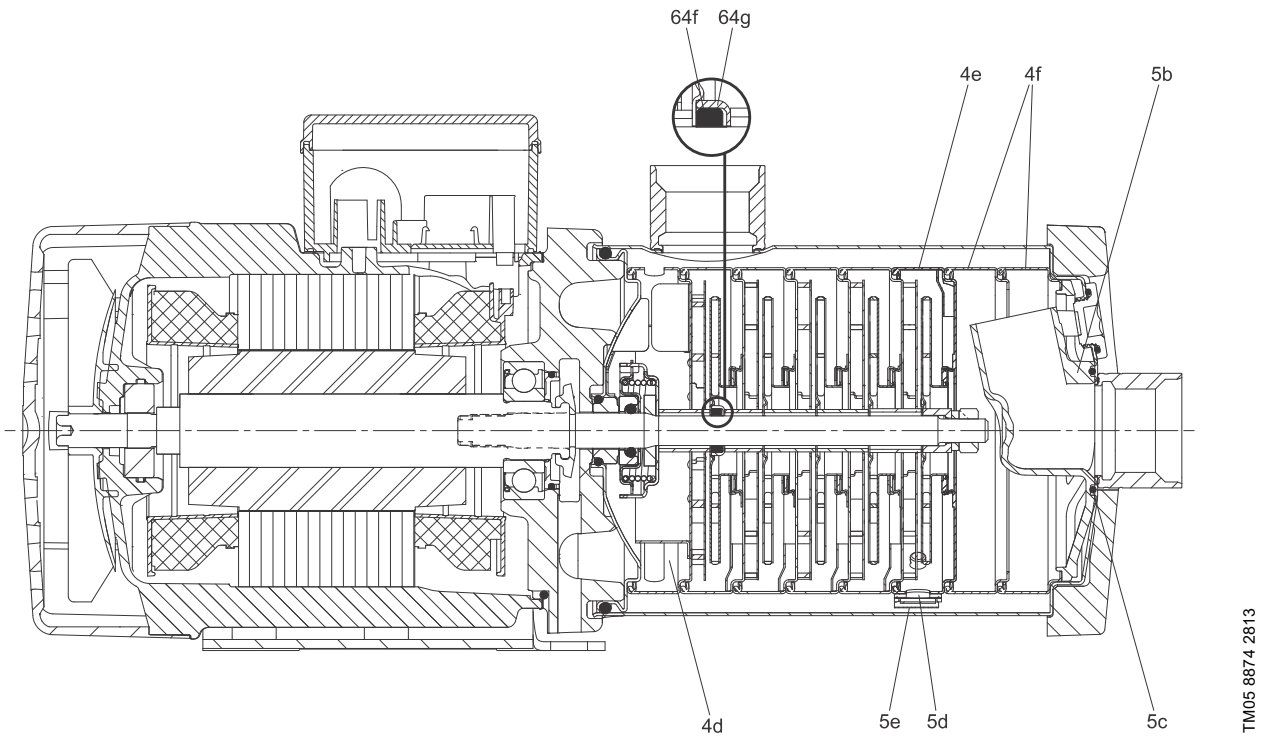

Fig. 25 CM 1-3 (self-priming version)

Components

Pos.	Description	Material
4d	Chamber complete with ribs and vanes	Stainless steel (EN 1.4301/AISI 304)
4e	Chamber with recirculation hole	Stainless steel (EN 1.4301/AISI 304)
4f	Empty chambers	Stainless steel (EN 1.4301/AISI 304)
5b	Syphon	Composite (Noryl 731s-701-1977)
5c	O-ring	EPDM
5d	Base for valve	Composite (Noryl 731s-701-1977)
5e	Spring plate	Stainless steel (EN 1.4310/AISI 301)
64f	Rubber seal	EPDM
64g	Container for rubber seal	Stainless steel (EN 1.4301/AISI 304)

Material specification

Pos.	Description	Material	Pump material version					
			Cast iron (EN-GJL-200)		Stainless steel (EN 1.4301/AISI 304)		Stainless steel (EN 1.4401/AISI 316)	
			EN	ISO/AISI/ASTM	EN	ISO/AISI/ASTM	EN	ISO/AISI/ASTM
Motor parts								
156b	Motor flange	Cast iron						
150	Stator housing	Silumin (Alu)						
151	Fan cover	Composite PBT/PC						
153	Ball bearing							
156	Fan	Composite PA 66 30 % GF						
158	Corrugated spring	Steel						
164b	Terminal box, MG	Composite PC/ASA or silumin (Alu)						
164e	Terminal box, MGE							
191	Base plate	Steel, electrocoated	1.0330.3		1.0330.3			
		Steel, powder-coated, 60 to 120 µ, NCS 7005					1.0330.3	
79	Diverting disc	Silicone fluid (LSR)						
155	Bearing cover plate	PPS						
Pump parts								
105	Shaft seal, steel parts	Stainless steel	1.4301/ 1.4401[1)]	AISI 304/ AISI 316[1)]	1.4301/ 1.4401[1)]	AISI 304/ AISI 316[1)]	1.4401	AISI 316
	Shaft seal, seal faces	Al_2O_3/carbon or SiC						
51	Pump shaft	Stainless steel	1.4301	AISI 304	1.4301/ 1.4401[1)]	AISI 304/ AISI 316[1)]	1.4401	AISI 316
11 31[3)] 158a 159	O-rings	EPDM, FKM or FFKM						
157a[3)]	Gasket	Paper						
139b[4)]	Gasket	Aramide fibres (nbr)						
2[4)]	Outlet part	Cast iron						
6[4)]	Inlet part	Cast iron						
4	Chamber	Stainless steel	1.4301/ 1.4401[1)]	AISI 304/ AISI 316[1)]	1.4301/ 1.4401[1)]	AISI 304/ AISI 316[1)]	1.4401	AISI 316
25	Plug	Stainless steel	1.4404	AISI 316L	1.4404	AISI 316L	1.4404	AISI 316L
49	Impeller	Stainless steel	1.4301/ 1.4401[1)]	AISI 304/ AISI 316[1)]	1.4301/ 1.4401[1)]	AISI 304/ AISI 316[1)]	1.4401	AISI 316
64	Spacing pipe	Stainless steel	1.4401	AISI 316	1.4401	AISI 316	1.4401	AISI 316
64c	Clamp	Stainless steel	STX2000[5)]		STX2000[5)]		STX2000[3)]	
6[3)]	Flange	Cast iron						
16	Sleeve	Stainless steel			1.4301/ 1.4401[1) + 2)]	AISI 304/ AISI 316[1)]	1.4401	AISI 316
67	Nut	Stainless steel A4						
66	Washer (NORD-LOCK)	Steel	1.4547		1.4547		1.4547	

1) On request.

2) As standard, the pumps listed below are fitted with sleeves made of stainless steel 1.4401:
CM, CME 1-9 up to and including CM, CME 1-14
CM, CME 3-9 up to and including CM, CME 3-14
CM, CME 5-9 up to and including CM, CME 5-13
CM, CME 10-6 up to and including CM, CME 10-8.

3) Only in CM, CME-I/G pumps.

4) Only in CM, CME-A pumps.

5) STX2000 ~ CrNiMO 22 19 4.

11. CME pumps

Communication with CME pumps

Communication with CME pumps is possible via the following:

- a central building management system
- Grundfos GO Remote
- an operating panel.

Central building management system

The operator can communicate with a CME pump at a distance. Communication can take place via a central building management system allowing the operator to monitor and change control modes and setpoint settings.

Communication interface

CME pumps can be fitted with a communication interface module (CIM). This means that no external communication interface is required.

The modules are available as accessories, see page 142.

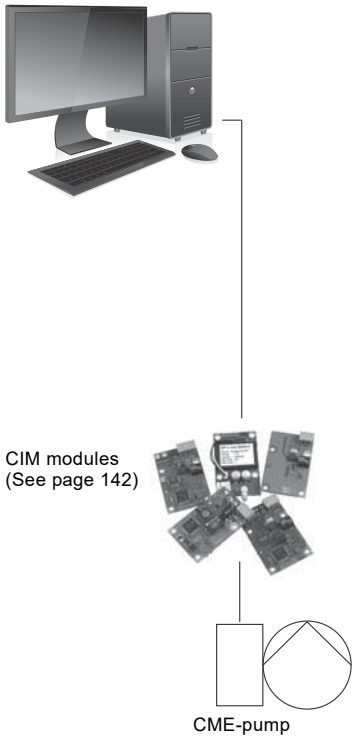

Fig. 26 Structure of a central management system

Grundfos GO Remote

The pump is designed for wireless radio or infrared communication with Grundfos GO Remote.

Grundfos GO Remote enables setting of functions and gives access to status overviews, technical product information and actual operating parameters.

Grundfos GO Remote offers the following mobile interfaces (MI).

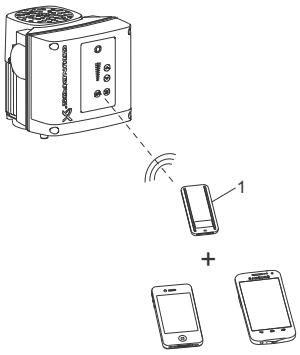

Fig. 27 Grundfos GO Remote communicating with the pump via radio or infrared connection (IR)

Pos.	Description
1	Grundfos MI 301: Separate module enabling radio or infrared communication. You can use the module in conjunction with an Android or iOS-based smart device with Bluetooth connection.

Grundfos GO Remote is available as an accessory. See page 142.

Operating panel

The operator can change the setpoint settings manually on the operating panel of the CME pump terminal box.

The design and functionality of the operating panels vary, depending on the MGE motor fitted to the CME pump.

The operating panel of the new-generation CME pumps enables radio communication. Grundfos Eye at the top of the operating panel is a pump status indicator light providing information about the pump operating status. Less or more advanced operating panels are available on request.

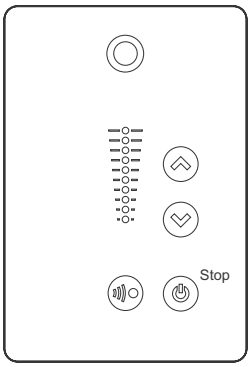

Fig. 28 Standard operating panels of CME pumps

Speed control of CME pumps

Affinity equations

Normally, CME pumps are used in applications characterised by a variable flow rate. Consequently, you cannot select a pump that is constantly operating at its optimum efficiency.

In order to achieve optimum operating economy, the duty point must be close to the optimum efficiency (eta) for most operating hours.

Between the minimum and maximum performance curves, CME pumps have an infinite number of performance curves, each representing a specific speed. You may therefore not be able to select a duty point close to the maximum curve.

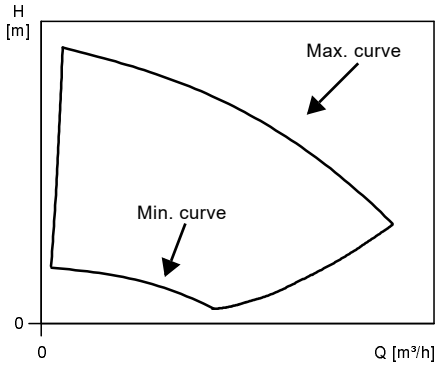

Fig. 29 Minimum and maximum performance curves

In situations where you cannot select a duty point close to the maximum curve, use the affinity equations below. The head (H), the flow rate (Q) and the input power (P) are the appropriate variables for calculating the motor speed (n).

Note that the approximated formulas apply on condition that the system characteristic remains unchanged for n_n and n_x and that it is based on the formula $H = k \times Q^2$ where k is a constant.

The power equation implies that the pump efficiency is unchanged at the two speeds. In practice, this is not quite correct.

Finally, the efficiency of the frequency converter and the motor must be taken into account if a precise calculation of the power saving resulting from a reduction of the pump speed is wanted.

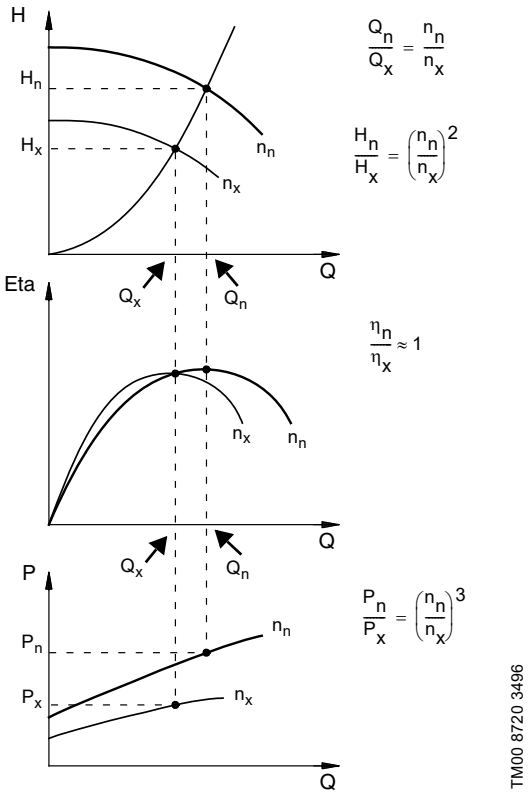

Fig. 30 Affinity equations

Legend

$H_{n:}$	Rated head [m]
$H_{x:}$	Current head [m]
$Q_{n:}$	Rated flow rate [m^3/h]
$Q_{x:}$	Current flow rate [m^3/h]
$n_{n:}$	Rated motor speed [min^{-1}]
$n_{x:}$	Current motor speed [min^{-1}]
$\eta_{n:}$	Rated efficiency [%]
$\eta_{x:}$	Current efficiency [%]

12. Grundfos CUE

CM pumps connected to Grundfos CUE external frequency converters

TM07 7198 3420

Fig. 31 Grundfos CUE product range

Grundfos CUE is a complete range of frequency converters for pump control in a wide range of applications. Grundfos CUE is designed for wall mounting.

Wide product range

TM04 3283 2014

Fig. 32

The CUE product range is quite comprehensive, covering five different voltage ranges, enclosure classes IP20/21 (NEMA 1) and IP54/55 (NEMA 12), and a wide range of output powers.

The table below provides a general overview.

Input voltage [V]	Output voltage [V]	Motor [kW]
1 x 200-240	3 x 200-240	1.1 - 7.5
3 x 200-240	3 x 200-240	0.75 - 45
3 x 380-500	3 x 380-500	0.55 - 250
3 x 525-600	3 x 525-600	0.75 - 7.5

13. Approvals and markings

CM, CME pumps

Safety approvals

cULus, pumps

The cULus approval complies with the following standards:

- UL778 and C22.2 No 108
- NEMA 250 (IP code).

The cULus approval covers the standard product range for the following supply voltages:

- 1 x 115/230 V, 60 Hz (supply voltage B)
- 1 x 115/230 V, 60 Hz (supply voltage B1)

Contact Grundfos for further information.

Overheating protection

Note that cULus-approved pumps have no internal protection.

cURus, IE3 motors

The cURus approval for the IE3 motors complies with the following standards:

- UL1004-1
- CSA 22.2 No. 100.

Note that motors with power ratings of 3 kW and up have built-in thermistors (PTC).

The cURus approval covers the IE3 motors for the following supply voltages:

- 3 x 208-230/440-480 V, 60 Hz (supply voltage E/E1)
- 3 x 200/346 V, 50 Hz
  3 x 200-220/346-380 V, 60 Hz (supply voltage G)
- 3 x 220-240/380-415 V, 50 Hz
  3 x 220-255/380-440 V, 60 Hz (supply voltage O)
- 3 x 380-415 V, 50 Hz
  440-480 V, 60 Hz (supply voltage J)
- 3 x 575 V, 60 Hz (supply voltage H).

cURus, E-motors

The cURus approval for E-motors complies with the following standards:

- UL 1004-1
- CSAC22.2 No. 100
- UL 60730-1.

The cURus approval covers the CME motors for the following supply voltages:

- 3 x 380-500 V, 50/60 Hz (supply voltage S)
- 3 x 440-480 V, 50/60 Hz (supply voltage T)
- 1 x 200-240 V, 50/60 Hz (supply voltage U)
- 3 x 200-240 V, 50/60 Hz (supply voltage V).

Drinking water approvals

- WRAS
- ACS
- NSF61 and NSF372
- German Drinking Water Ordinance, TrinkwV §17, (2), (UBA).

Energy approvals

The following energy approvals are available on request:

- CEL
- cURus Energy for Canada
- Energy Independence and Security Act (EISA) for the USA (CC marking)
- EuP for EU
- Minimum energy performance standard (MEPS) for Korea, Taiwan, China and Brazil.

Contact Grundfos if you have any questions regarding energy approvals for other countries.

Other approvals and compliance with directives

- CCC
- EAC
- PSE
- RCM
- RoHS.

Markings

CM self-priming pumps

The following approvals and markings are available as standard. Further approvals and markings are available on request. Contact Grundfos for further information.

Drinking water approvals

- WRAS
- ACS
- German Drinking Water Ordinance, TrinkwV §17, (2), (UBA).

Other approvals and compliance with directives

- CCC
- CEL
- EuP.
- EAC
- RoHS.

Markings

14. Certificates

Certificate	Description
Certificate of compliance with the order	According to EN 10204, 2.1. Grundfos document certifying that the pump supplied is in compliance with the order specifications.
Test certificate. Non-specific inspection and testing	According to EN 10204, 2.2. Certificate with inspection and test results of a non-specific pump.
Inspection certificate 3.1	Grundfos document certifying that the pump supplied is in compliance with the order specifications. Inspection and test results are mentioned in the certificate.
Inspection certificate	Grundfos document certifying that the pump supplied is in compliance with the order specifications. Inspection and test results are mentioned in the certificate. Certificate from the surveyor is included. We offer the following inspection certificates: • Lloyds Register of Shipping (LRS) • DNV GL (Det Norske Veritas Germanischer Lloyd) • American Bureau of Shipping (ABS) • Registro Italiano Navale Agenture (RINA) • Russian maritime register of Shipping (RS) • Biro Klassifikasio Indonesia (BKI) • United States Coast Guard (USCG) • Nippon Kaiji Koykai (NKK).
Standard test report	Certifies that the main components of the specific pump are manufactured by Grundfos, and that the pump has been QH-tested, inspected and conforms to the full requirements of the appropriate catalogues, drawings and specifications.
Material specification report	Certifies the material used for the main components of the specific pump.
Duty-point verification report	Certifies a test point specified by the customer. Issued according to ISO 9906:2012 concerning "Duty point verification".
Surface-roughness	Shows the measured roughness of the cast pump base of the specific pump. The report indicates the values measured at the base inlet and outlet according to ISO 1302.
Vibration report	Vibration report indicating the values measured during the performance test of the specific pump according to ISO 10816.
Motor test report	Shows the performance test of the specific motor, including power output, current, temperature, stator windings resistance and insulation test.
Cleaned and dried pump	Confirms that the specific pump has been cleaned and dried, and how it was done.

Examples of the certificates are shown on pages 36 and 37.
Note that other certificates are available on request.

Examples of certificates

Certificate of compliance with the order

BE › THINK › INNOVATE › GRUNDFOS

Certificate of compliance with the order

EN 10204 2.1

Customer name	
Customer order no.	
Customer Tag no.	
GRUNDFOS order no.	
Product type	

We the undersigned hereby guarantee and certify that the materials and/or parts for the above mentioned product were manufactured, tested, inspected, and conform to the full requirements of the appropriate catalogues, drawings and/or specifications relative thereto.

GRUNDFOS
Date:

Signature:
Name:
Dept.:

Part no. 96 50 78 95/1001002

TM03 4165 1706

Test certificate

BE › THINK › INNOVATE › GRUNDFOS

Test certificate
Non-specific inspection and testing

EN 10204 2.2

Customer name	
Customer order no.	
Customer TAG no.	
GRUNDFOS order no.	

Pump		
Pump type		Part number
Motor make		Part number
Flow	m^3/h	
Head	m	
Power P2	kW	
Voltage	V	
Frequency	Hz	
Full load current	A	
Motor speed	min^{-1}	

We the undersigned hereby guarantee and certify that the materials and/or parts for the above mentioned product were manufactured, tested, inspected, and conform to the full requirements of the appropriate catalogues, drawings and / or specifications relative thereto.

GRUNDFOS
Date:

Signature:
Name:
Dept.:

Part no 96 50 78 96/1001002

TM03 4163 1706

Inspection certificate 3.1

BE › THINK › INNOVATE › GRUNDFOS

Inspection certificate.
EN 10204 3.1

Manufactured by	
GRUNDFOS order no.	
GRUNDFOS DUT id.	
Customer order no.	
Customer name and address	
Shipyard / factory	
Ship / new building	
Customer TAG no.	
Classifying society	**GRUNDFOS authorized department**

Pump		Motor	
Pump type		Make	
Part number		Part number	
Serial no.		Serial No.	
Flow rate (m^3/h)		P2 (kW)	
Head (m)		Voltage (V)	
Max. ope. P/t (bar / °C)		Current (A)	
	Din / W. - No.	$n(min^{-1})$	
Base/Pump head cover		Frequency (Hz)	
Impeller/guidevanes		Insulation class	
Shaft/sleeve		Power factor	

Customer's requirements			
Flow rate (m^3/h)		Head (m)	

Test result ref. requirements											
Q(m^3/h)		H(m)		$n(min^{-1})$		I(A)		P1(kW)			

Hydrostatic test		Bar – no leaks or deformation observed

GRUNDFOS
Date:

Signature:
Name:
Dept.:

Part no. 96 50 78 97/1014142

TM03 4162 3607

Inspection certificate

BE › THINK › INNOVATE › GRUNDFOS

Inspection certificate.
Russian Maritime Register of Shipping

Manufactured by	
GRUNDFOS order no.	
GRUNDFOS DUT id.	
Customer order no.	
Customer name and address	
Shipyard / factory	
Ship / new building	
Customer TAG no.	
Classifying society	**Russian Maritime Register of Shipping (RS)**

Pump		Motor	
Pump type		Make	
Part number		Part number	
Serial no.		Serial No.	
Flow rate (m^3/h)		P2 (kW)	
Head (m)		Voltage (V)	
Max. ope. P/t (bar / °C)		Current (A)	
Service		$n(min^{-1})$	
Medium		Frequency (Hz)	
	Din / W. - No.	Insulation class	
Base/Pump head cover		Power factor	
Impeller/guidevanes			
Shaft/sleeve			

Customer's requirements			
Flow rate (m^3/h)		Head (m)	

Test result ref. requirements											
Q(m^3/h)		H(m)		$n(min^{-1})$		I(A)		P1(kW)			

Hydrostatic test		Bar – no leaks or deformation observed
The pump has been marked		

Surveyor signature: _____
Tested date: _____

GRUNDFOS
Date:

Signature:
Name:
Dept.:

Part no. 96 50 79 25/1014142

TM03 4156 3607

Standard test report

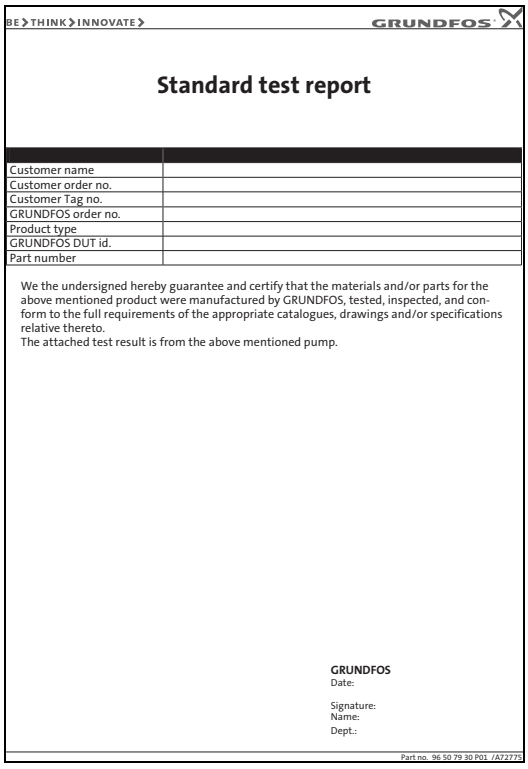

BE › THINK › INNOVATE ›

GRUNDFOS

Standard test report

Customer name	
Customer order no.	
Customer Tag no.	
GRUNDFOS order no.	
Product type	
GRUNDFOS DUT id.	
Part number	

We the undersigned hereby guarantee and certify that the materials and/or parts for the above mentioned product were manufactured by GRUNDFOS, tested, inspected, and conform to the full requirements of the appropriate catalogues, drawings and/or specifications relative thereto.
The attached test result is from the above mentioned pump.

GRUNDFOS
Date:

Signature:
Name:
Dept.:

Part no. 96 50 79 30 P01 /A72775

TM03 4143 1706

Material specification report

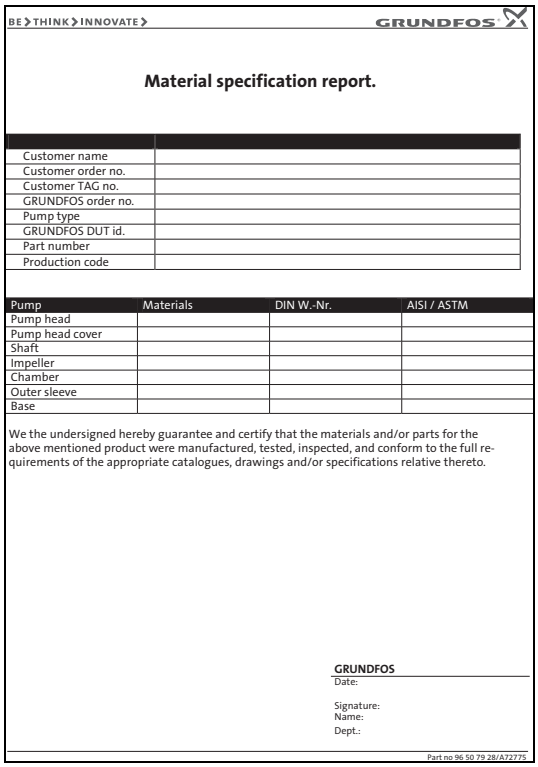

BE › THINK › INNOVATE ›

GRUNDFOS

Material specification report.

Customer name	
Customer order no.	
Customer TAG no.	
GRUNDFOS order no.	
Pump type	
GRUNDFOS DUT id.	
Part number	
Production code	

Pump	Materials	DIN W.-Nr.	AISI / ASTM
Pump head			
Pump head cover			
Shaft			
Impeller			
Chamber			
Outer sleeve			
Base			

We the undersigned hereby guarantee and certify that the materials and/or parts for the above mentioned product were manufactured, tested, inspected, and conform to the full requirements of the appropriate catalogues, drawings and/or specifications relative thereto.

GRUNDFOS
Date:

Signature:
Name:
Dept.:

Part no 96 50 79 28/A72775

TM03 4150 1706

Material specification report with certificate from raw material supplier

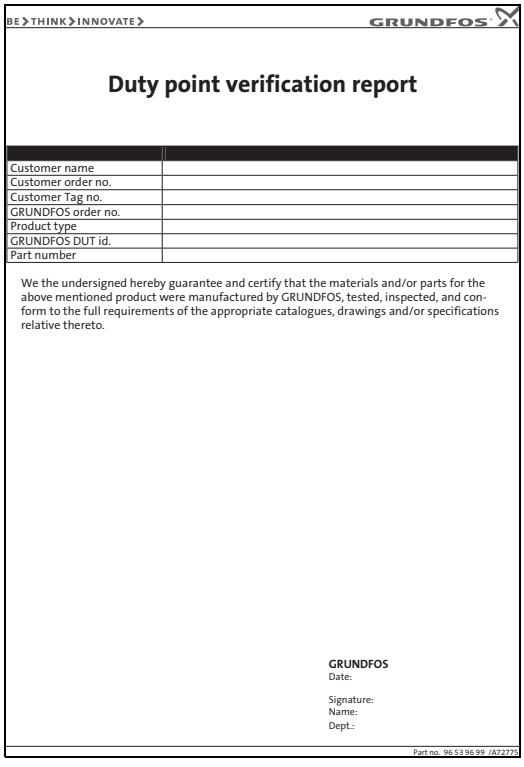

BE › THINK › INNOVATE ›

GRUNDFOS

Duty point verification report

Customer name	
Customer order no.	
Customer Tag no.	
GRUNDFOS order no.	
Product type	
GRUNDFOS DUT id.	
Part number	

We the undersigned hereby guarantee and certify that the materials and/or parts for the above mentioned product were manufactured by GRUNDFOS, tested, inspected, and conform to the full requirements of the appropriate catalogues, drawings and/or specifications relative thereto.

GRUNDFOS
Date:

Signature:
Name:
Dept.:

Part no. 96 53 96 99 /A72775

TM03 4148 1706

Duty-point verification report

15. Selection of pumps

Selection of pumps must be based on these elements:

- the duty point of the pump (see below)
- dimensional data such as pressure loss as a result of height differences, friction loss in the pipes, pump efficiency (see below)
- pump materials (see page 39)
- pump connections (see page 39)
- shaft seal (see page 21).

Duty point of the pump

From a duty point you can select a pump on the basis of the curve charts starting on page 41.

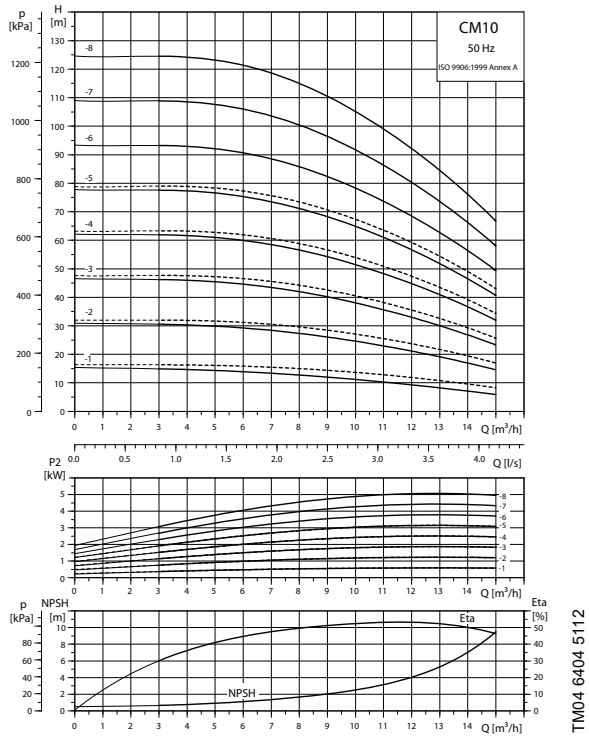

TM04 6404 5112

Fig. 33 Example of a curve chart

Dimensional data

When sizing a pump, take the following factors into account:

- Required flow rate and pressure at the draw-off point.
- Pressure loss as a result of height differences (H_{geo}).
- Friction loss in the pipes (H_f).
  It may be necessary to account for pressure loss in connection with,for example, long pipes, bends or valves. Best efficiency at the estimated duty point.*
- NPSH value.
  For calculation of the NPSH value, see *Minimum inlet pressure, NPSH* on page 22.

* See *Selection of CME pumps* on page 39 for further information about sizing CME pumps.

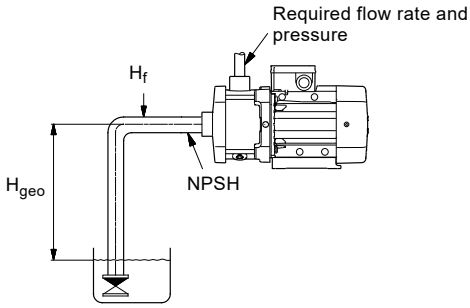

TM04 3486 4508

Fig. 34 Dimensional data

Pump efficiency

When sizing the pump, the efficiency (eta) must be considered so that the pump will operate at or near its maximum efficiency, for instance on the right-hand side in the curve example in fig. 35.

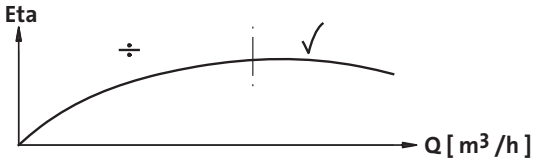

TM00 9190 1303

Fig. 35 Best efficiency

Before determining the best efficiency point, the operation pattern of the pump needs to be identified. If the pump is expected to operate at the same duty point, then select a CM pump which is operating at a duty point corresponding to the best efficiency of the pump. The example in fig. 36 shows how to check the pump efficiency when selecting a CM pump.

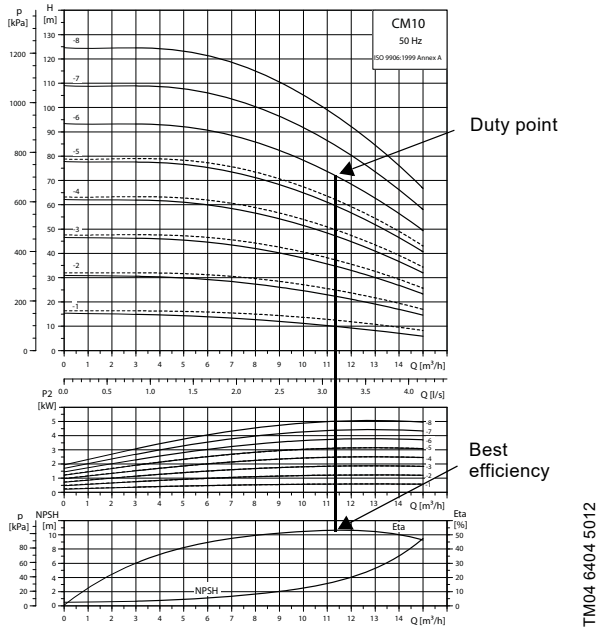

Fig. 36 Example of a CM pump's duty point

Pump materials

Select the material variant on the basis of the liquid to be pumped. The table below gives a general recommendation regarding selection of pump material.

Liquid to be pumped	Material in contact with pump media	Pump type
Clean, non-aggressive liquids such as potable water and oils	Cast iron* (EN-GJL-200)	CM-A, CME-A
Industrial liquids and acids	Stainless steel (EN 1.4301/AISI 304)	CM-I, CME-I
	Stainless steel (EN 1.4401/AISI 316)	CM-G, CME-G

* The impeller, chamber and filling plugs are made of stainless steel (EN 1.4301/AISI 304).
The pump shaft is made of stainless steel (EN 1.4301/AISI 316).

Contact Grundfos for a more specific selection based on the pumped liquid.

Pump connections

Fig. 37 Examples of pump connections

Selection of pump connection depends on the rated pressure and pipes. To meet any requirement, the CM and CME pumps offer a wide range of flexible connections such as the following:

- Tri-Clamp®
- DIN flange
- ANSI flange
- JIS flange
- Victaulic® coupling
- Whitworth thread Rp
- internal NPT thread.

Selection of CME pumps

CME pumps are normally used in applications characterised by a variable flow rate. Consequently, you cannot select a pump that is constantly operating at its optimum efficiency. In order to achieve optimum operating economy, the duty point must therefore be close to the optimum efficiency (eta) for most operating hours. For further information, see *CME pumps* on page 30.

Note that irrespective of the input frequency, the 100 % speed of CME pumps is approximately 3400 min^{-1}.

See CME performance curves on pages 66 to 71.

16. How to read the curve charts

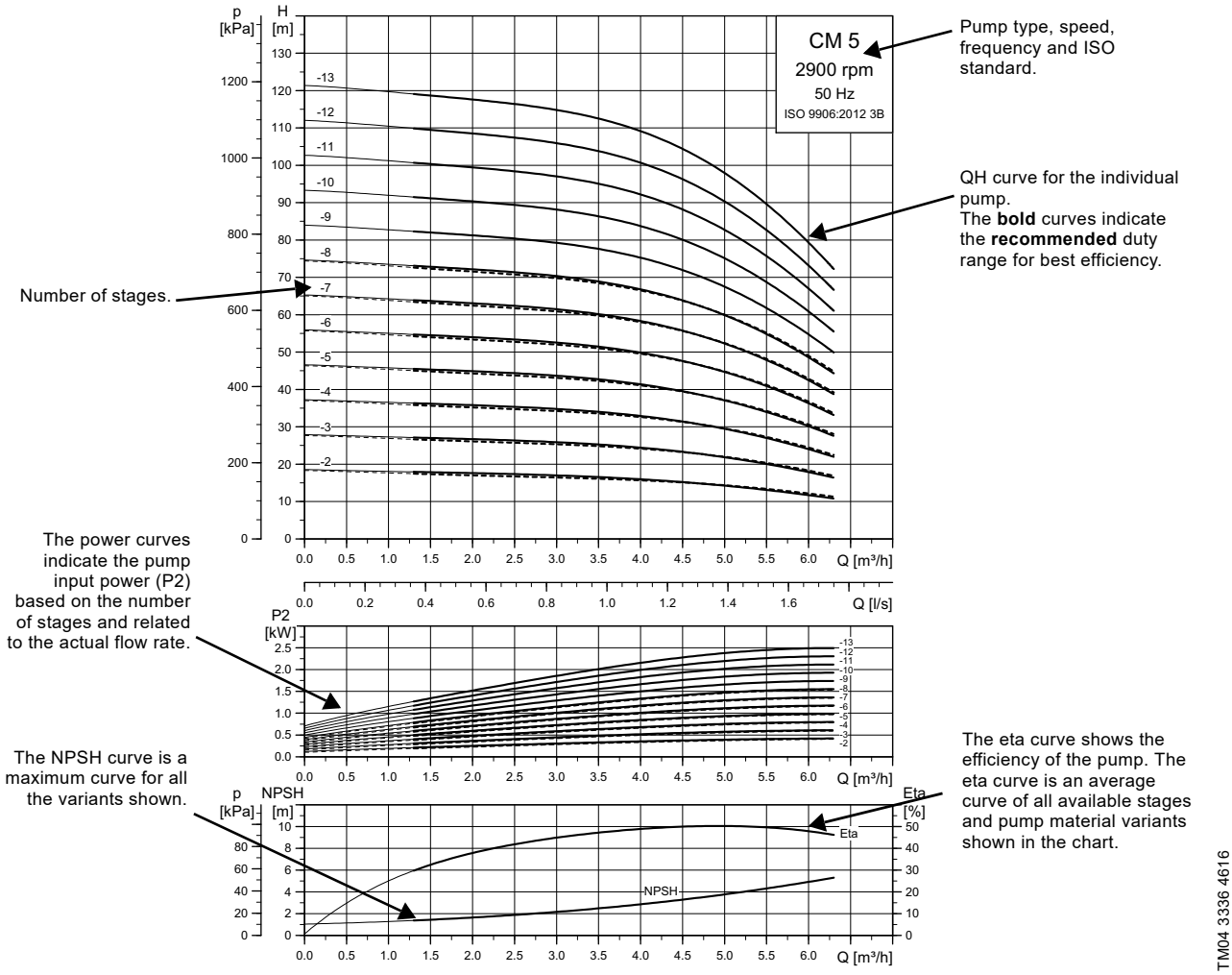

Fig. 38 How to read the curve charts

Guidelines for performance curves

The guidelines below apply to the curves shown on the following pages:

- Tolerances to ISO 9906:2012 3B.
- Measurements have been made with airless water at a temperature of 20 °C.
- The curves apply to the following kinematic viscosity: υ = 1 mm^2/s (1 cSt).
- The QH curves apply to fixed speeds of 2900 min^{-1} (50 Hz) and 3480 min^{-1} (60 Hz).
  Note that the actual speed will in most cases deviate from the above-mentioned speeds. So for realistic curves, please refer to Grundfos Product Center (http://product-selection.grundfos.com/) where the pump curves include the characteristics of the selected motor and therefore show curves at actual speeds. In Grundfos Product Center, you can also adjust the curves depending on the density and viscosity.
- The conversion between head H (m) and pressure p (kPa) applies to a water density of ρ = 1000 kg/m^3.
- Due to the risk of overheating, the pumps are not to be used at a flow rate below the minimum flow rate. The curve in fig. 39 shows the minimum flow rate as a percentage of the rated flow rate in relation to the liquid temperature.

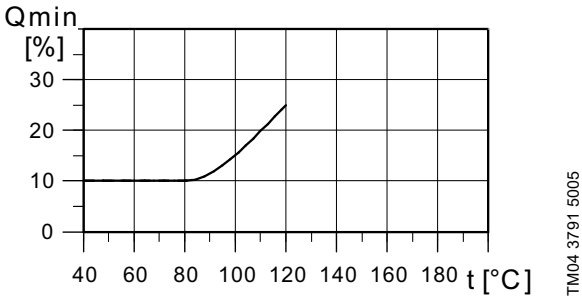

Fig. 39 Minimum flow rate

17. Performance curves, CM 50 Hz

CM 1

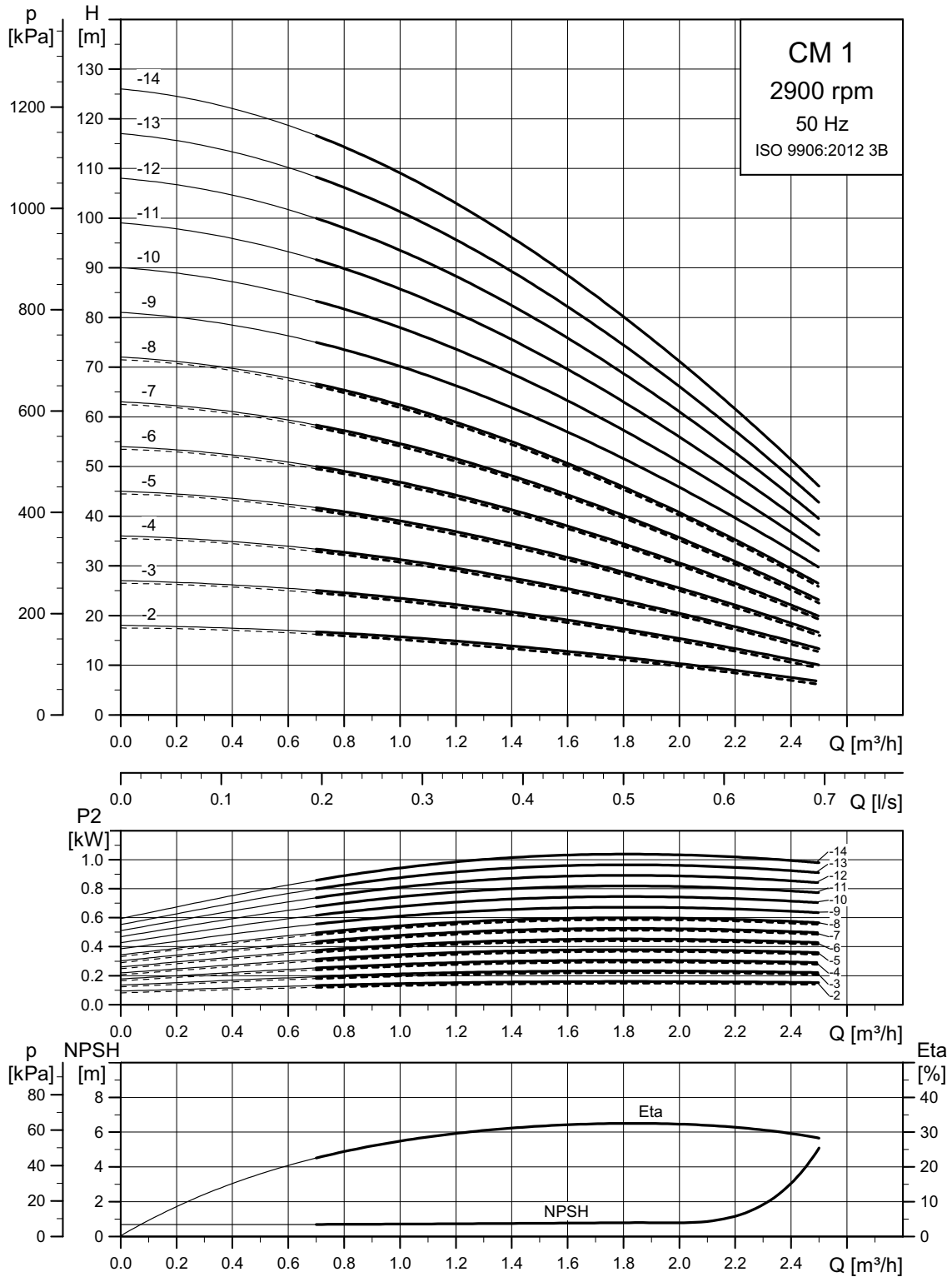

TM04 3334 3920

CM-A
CM-I/G

CM 3

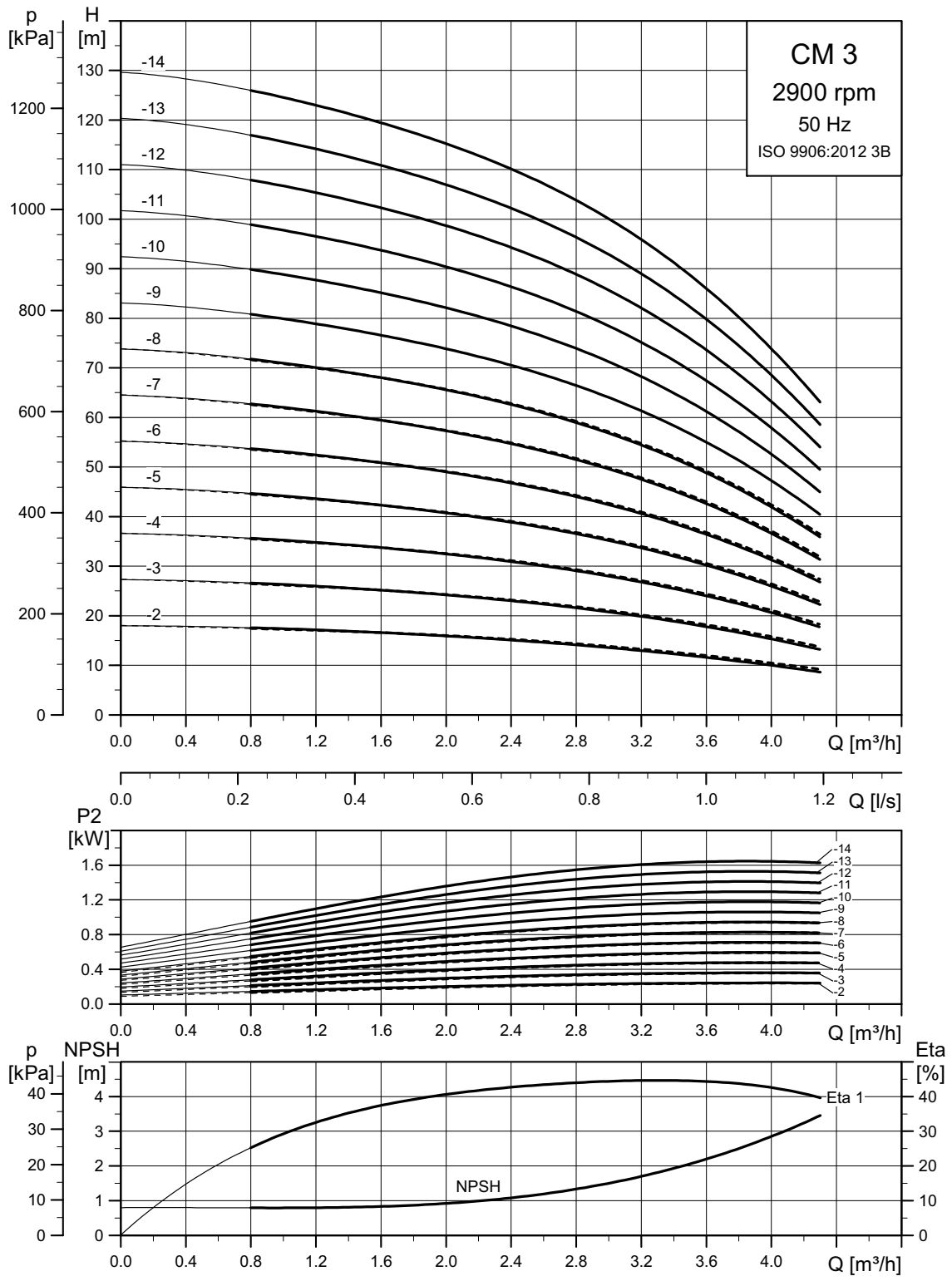

TM04 3335 3920

CM 5

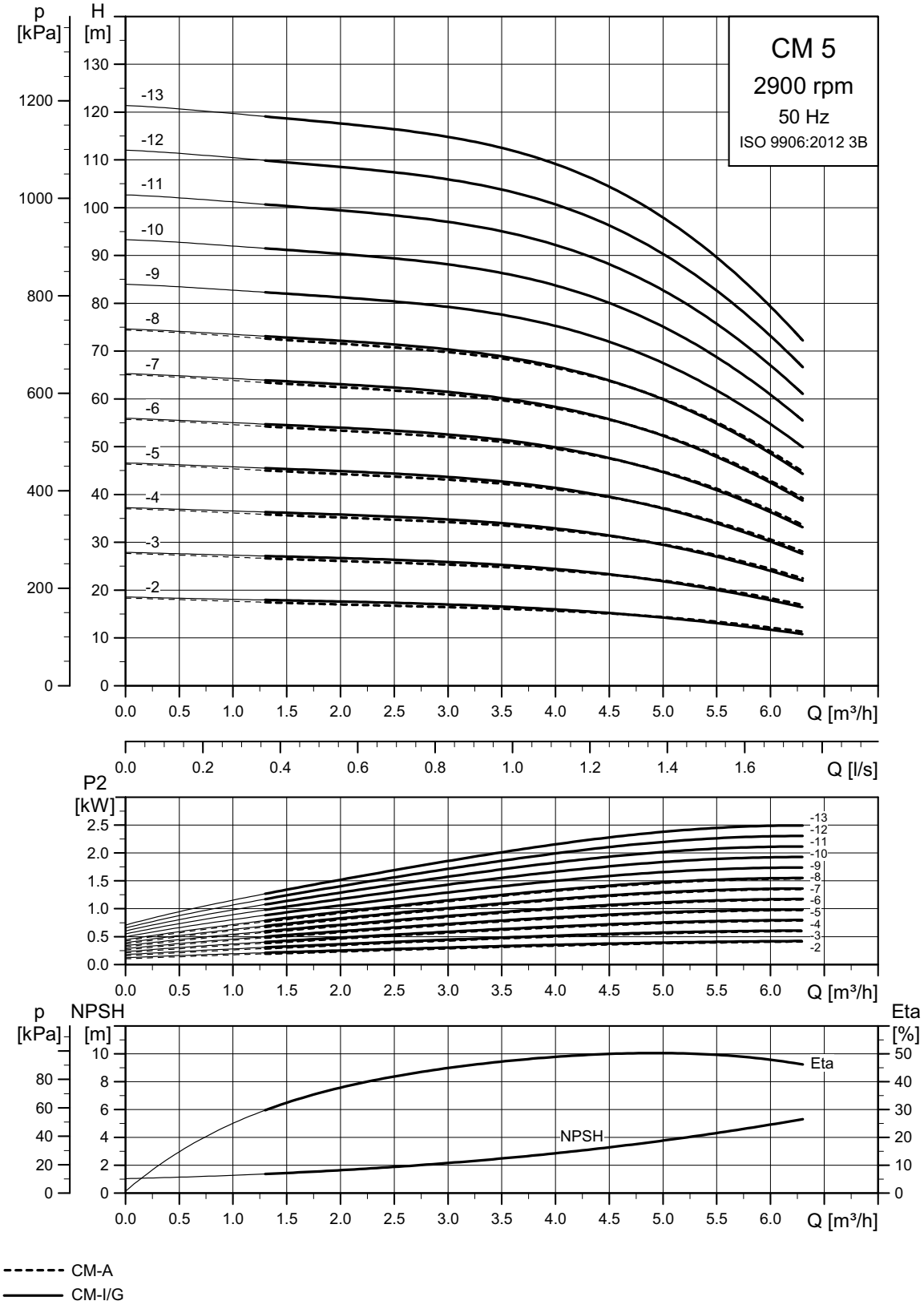

TM04 3336 3920

CM 10

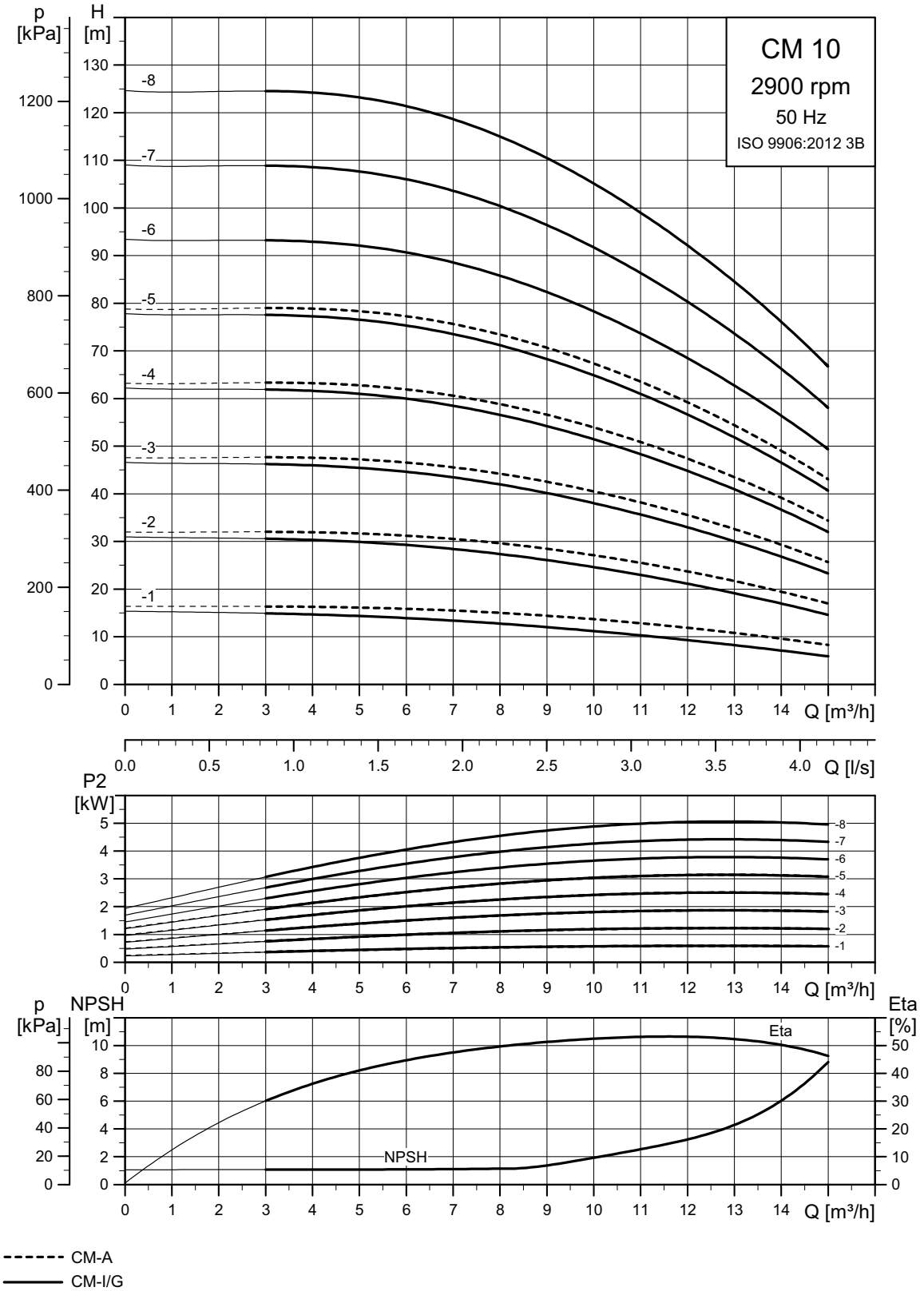

TM04 3337 3920

CM 15

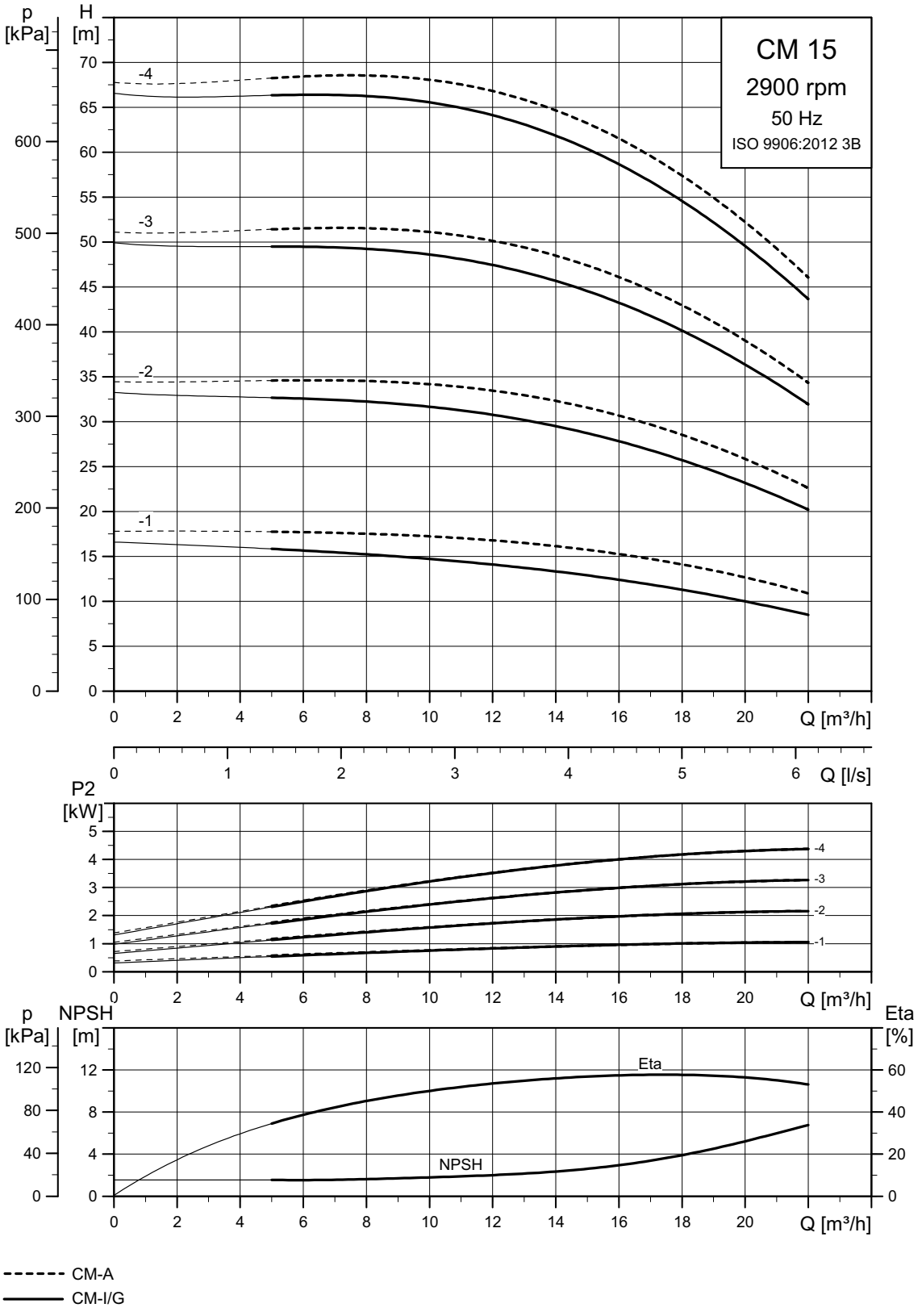

TM04 3338 3920

CM 25

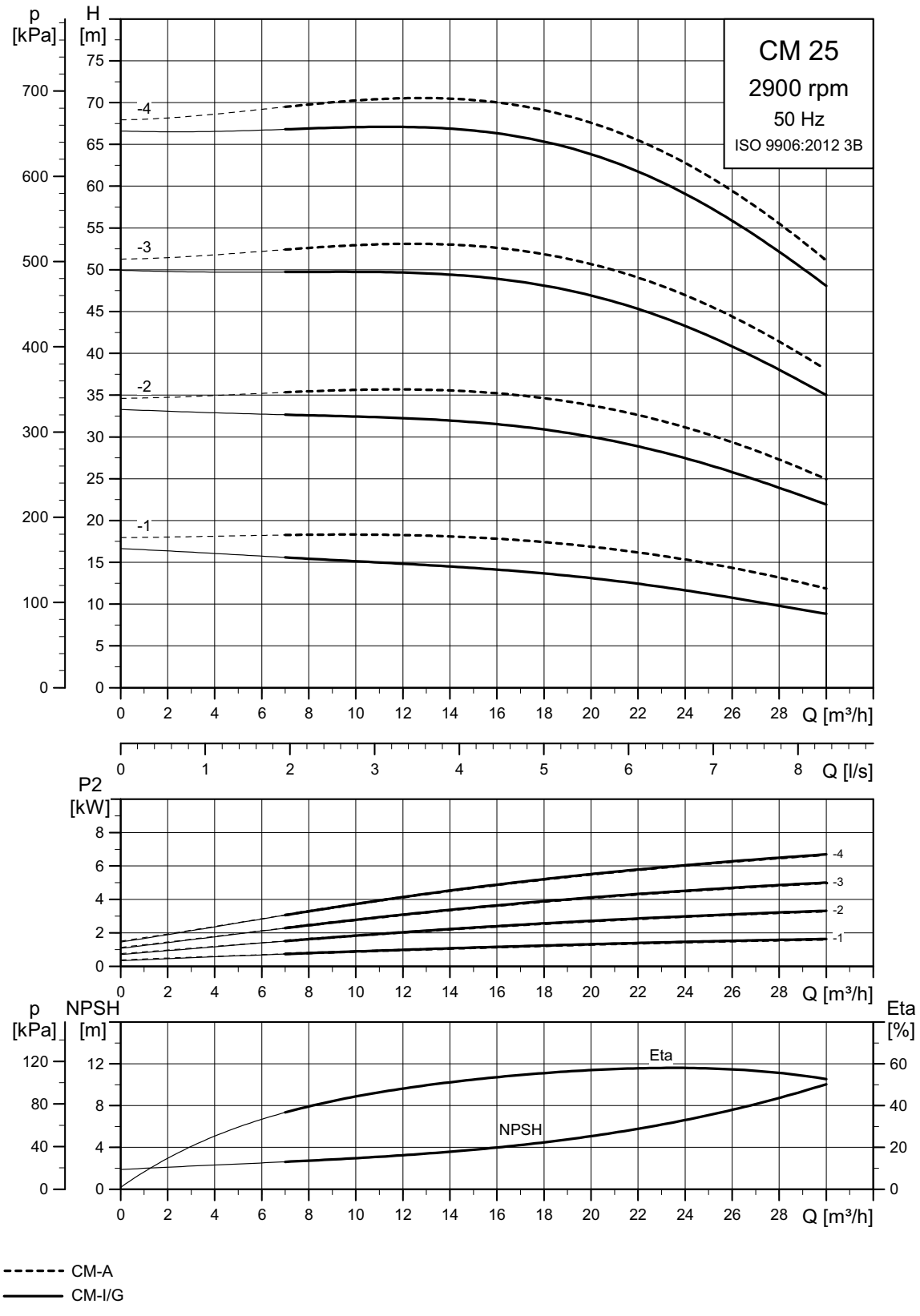

TM04 3339 3920

18. Performance curves, CM 60 Hz

CM 1

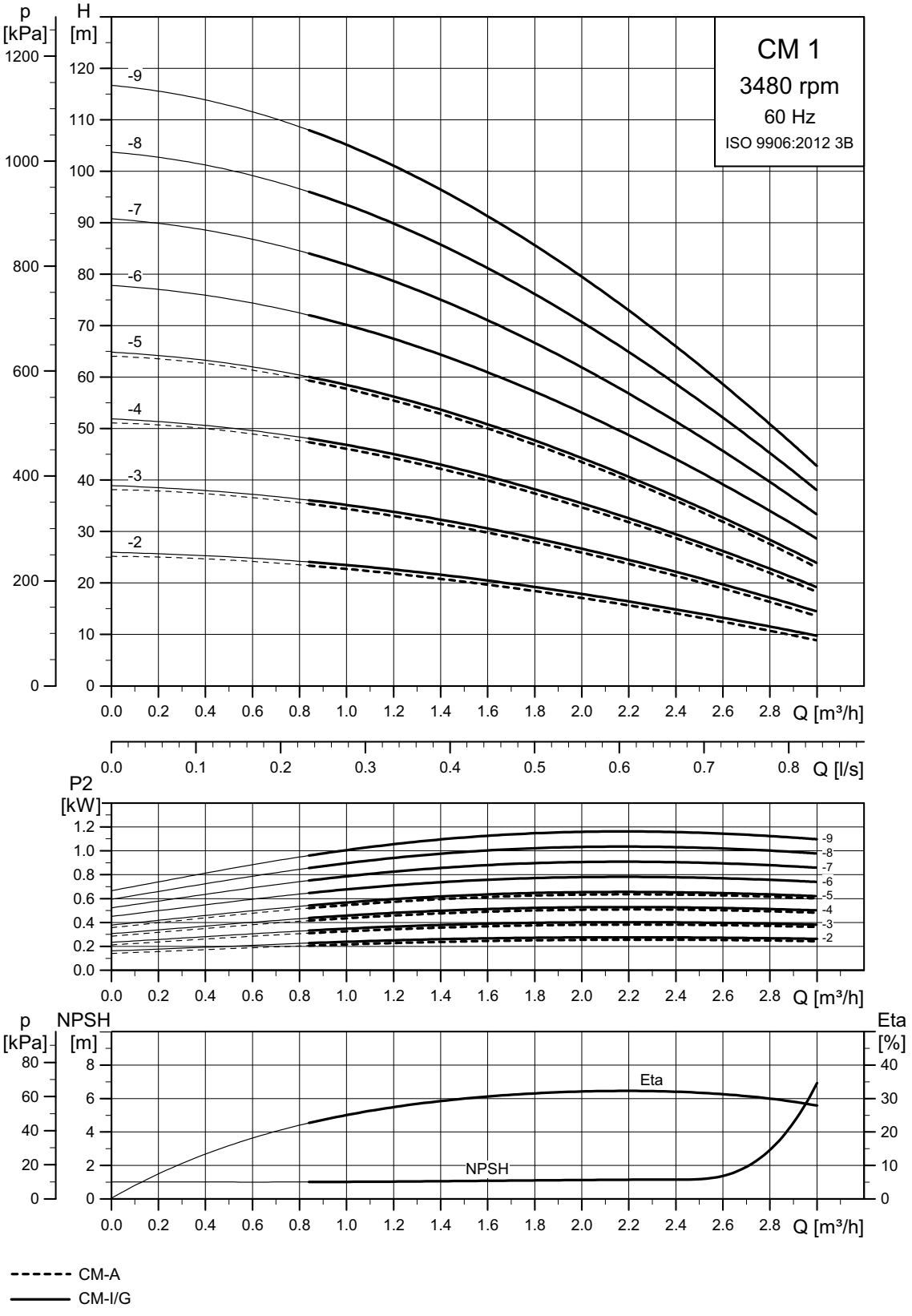

CM 3

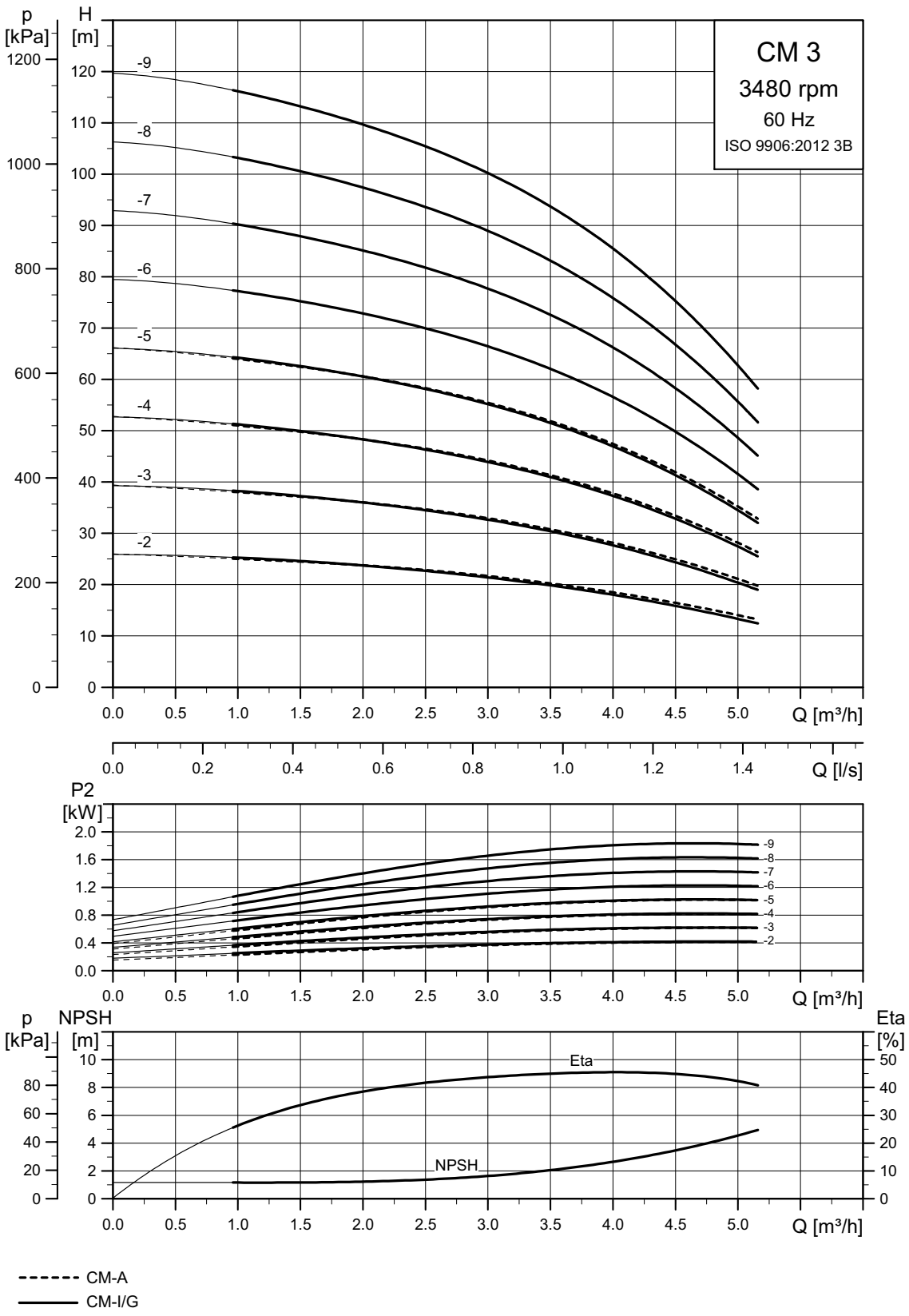

TM04 3371 3920

CM 5

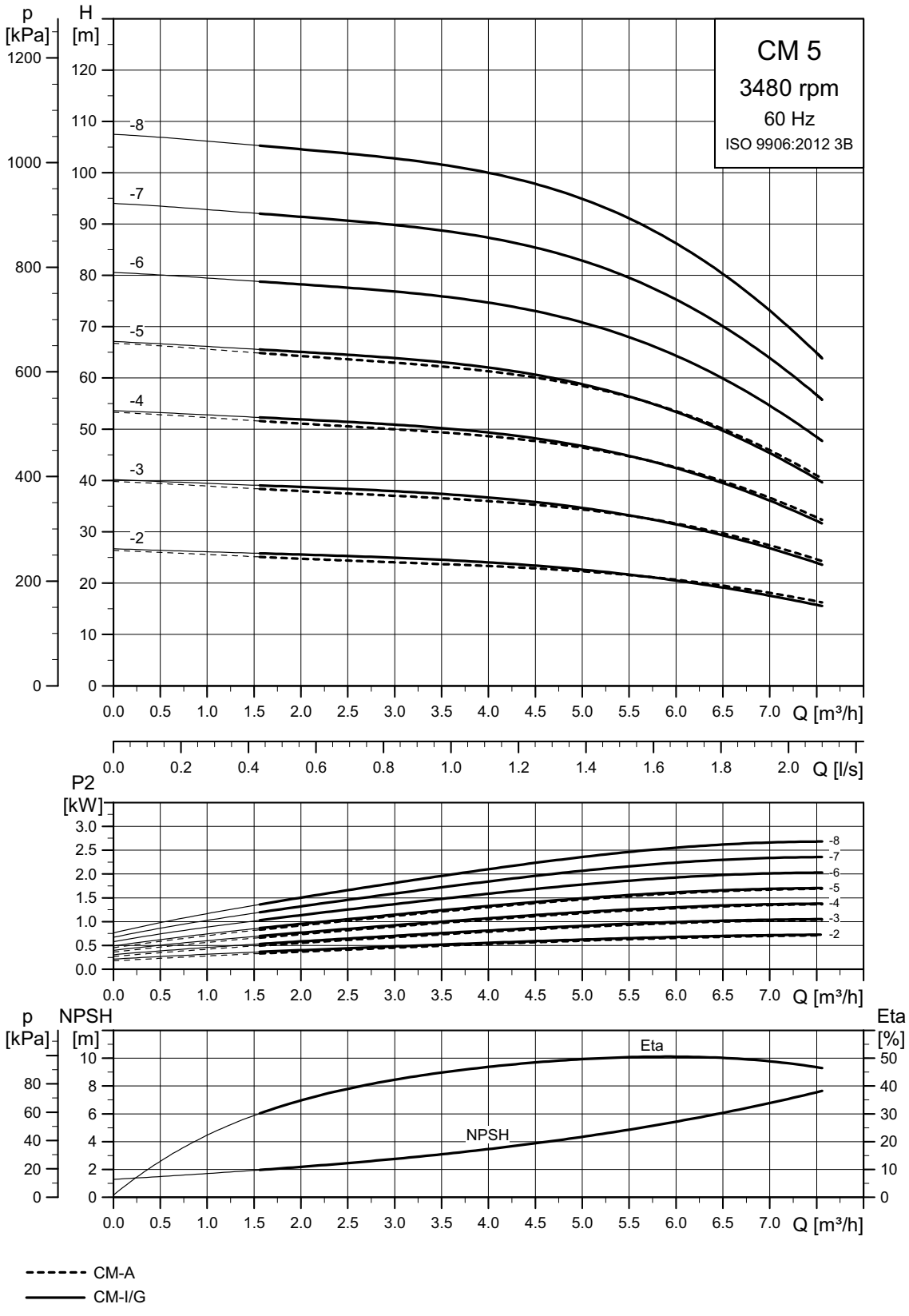

TM04 3372 3920

CM 10

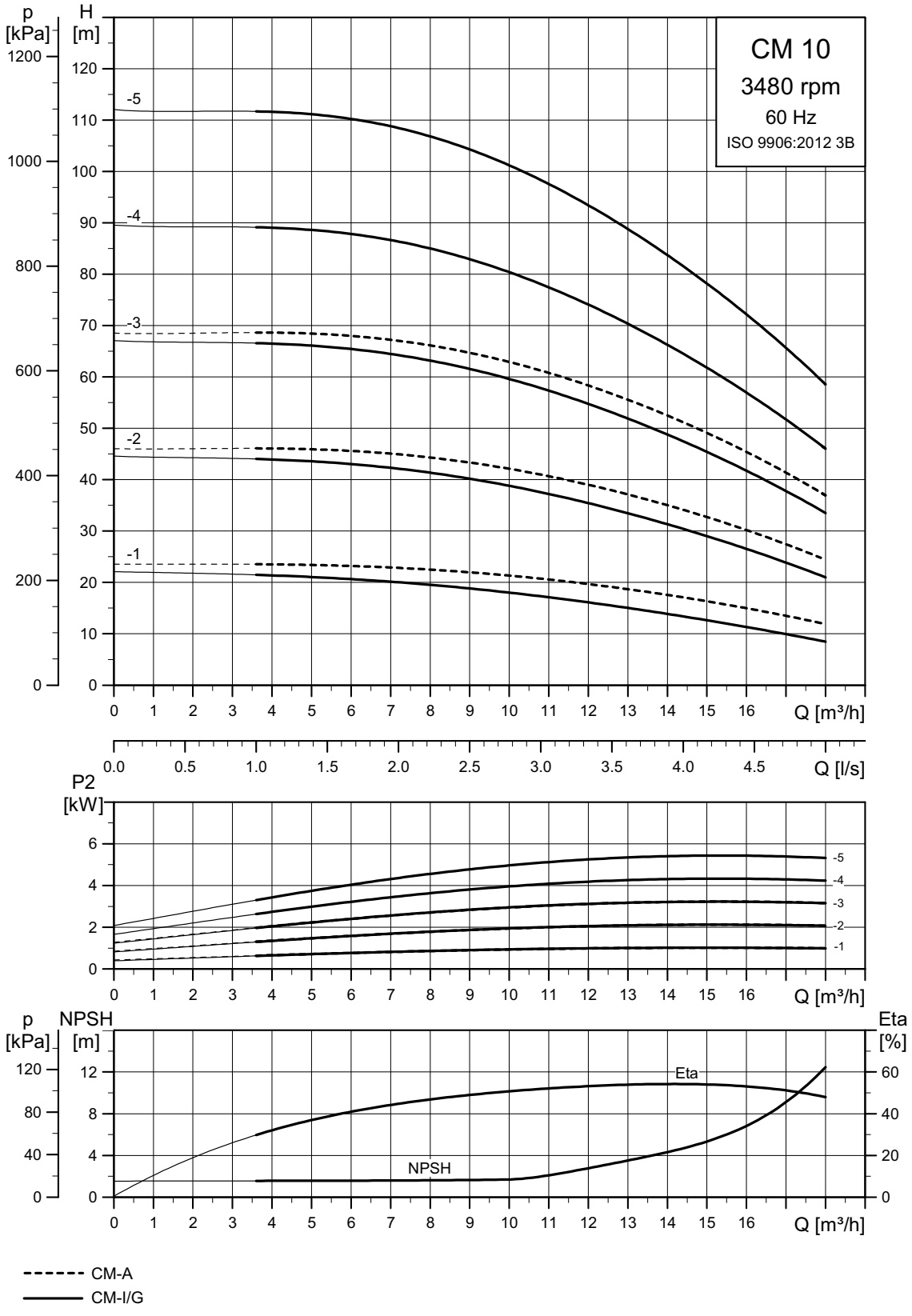

TM04 3373 3920

CM 15

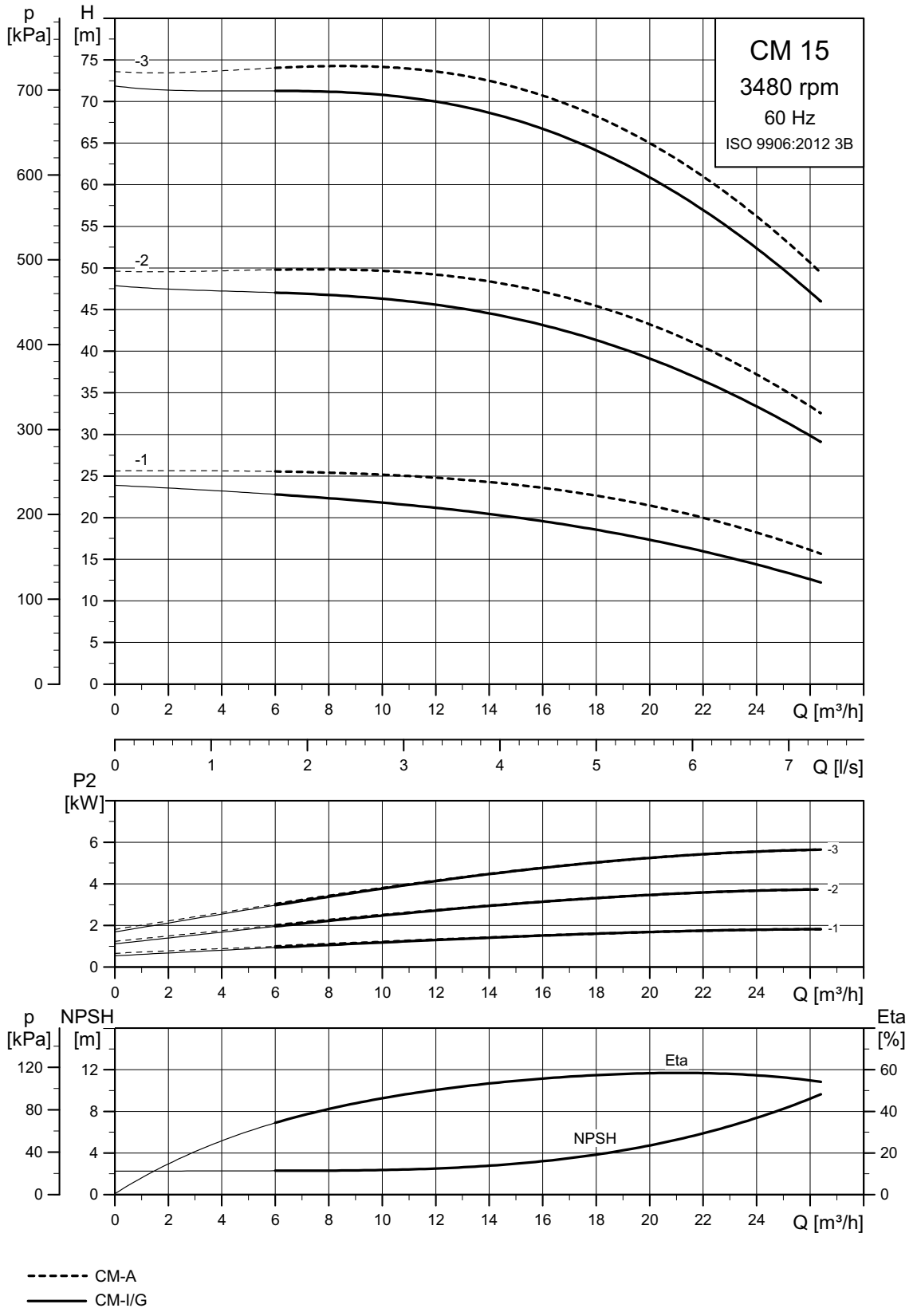

TM04 3374 3920

CM 25

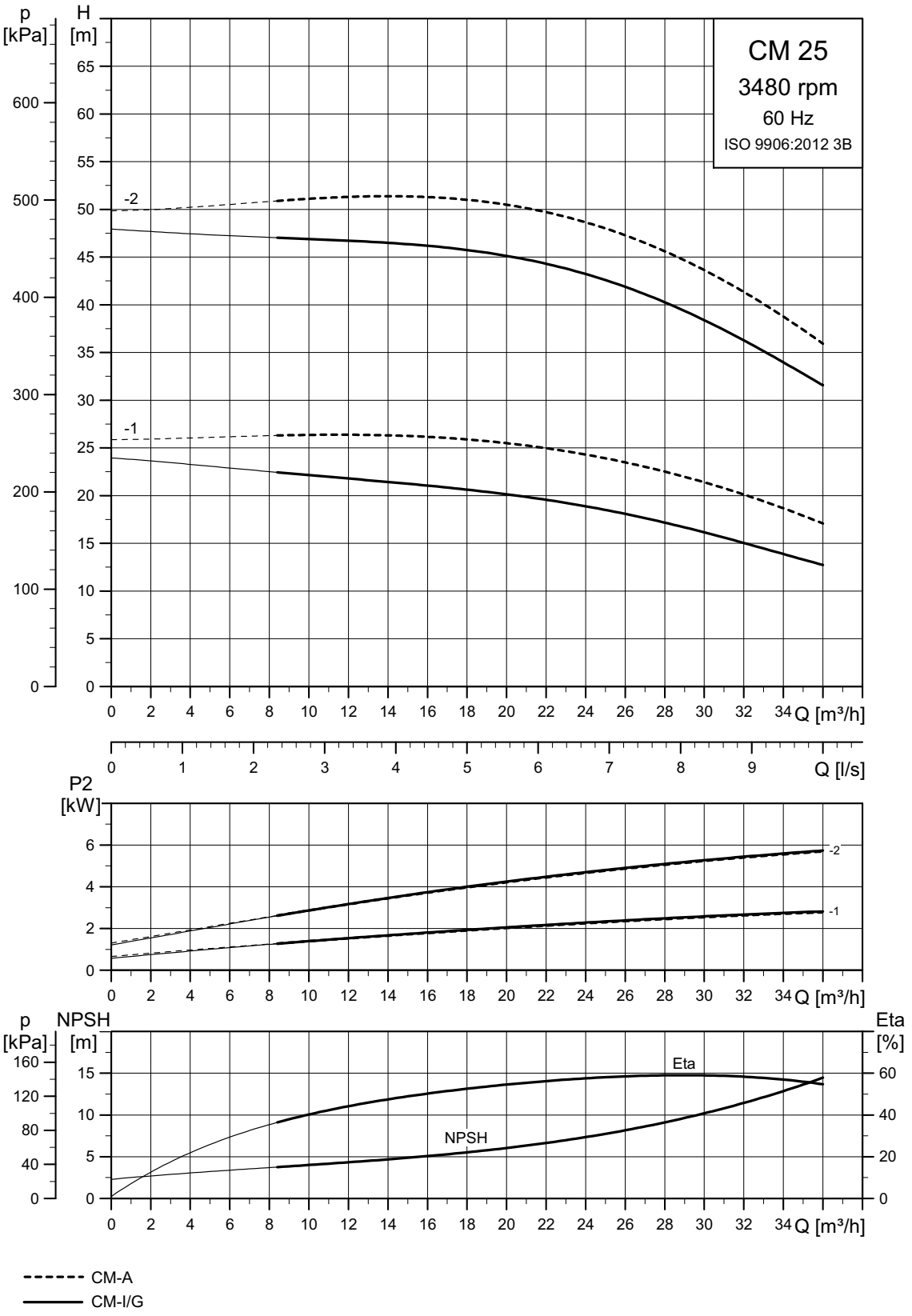

TM04 3375 3920

19. Performance curves, CM self-priming, 50 Hz

CM 1

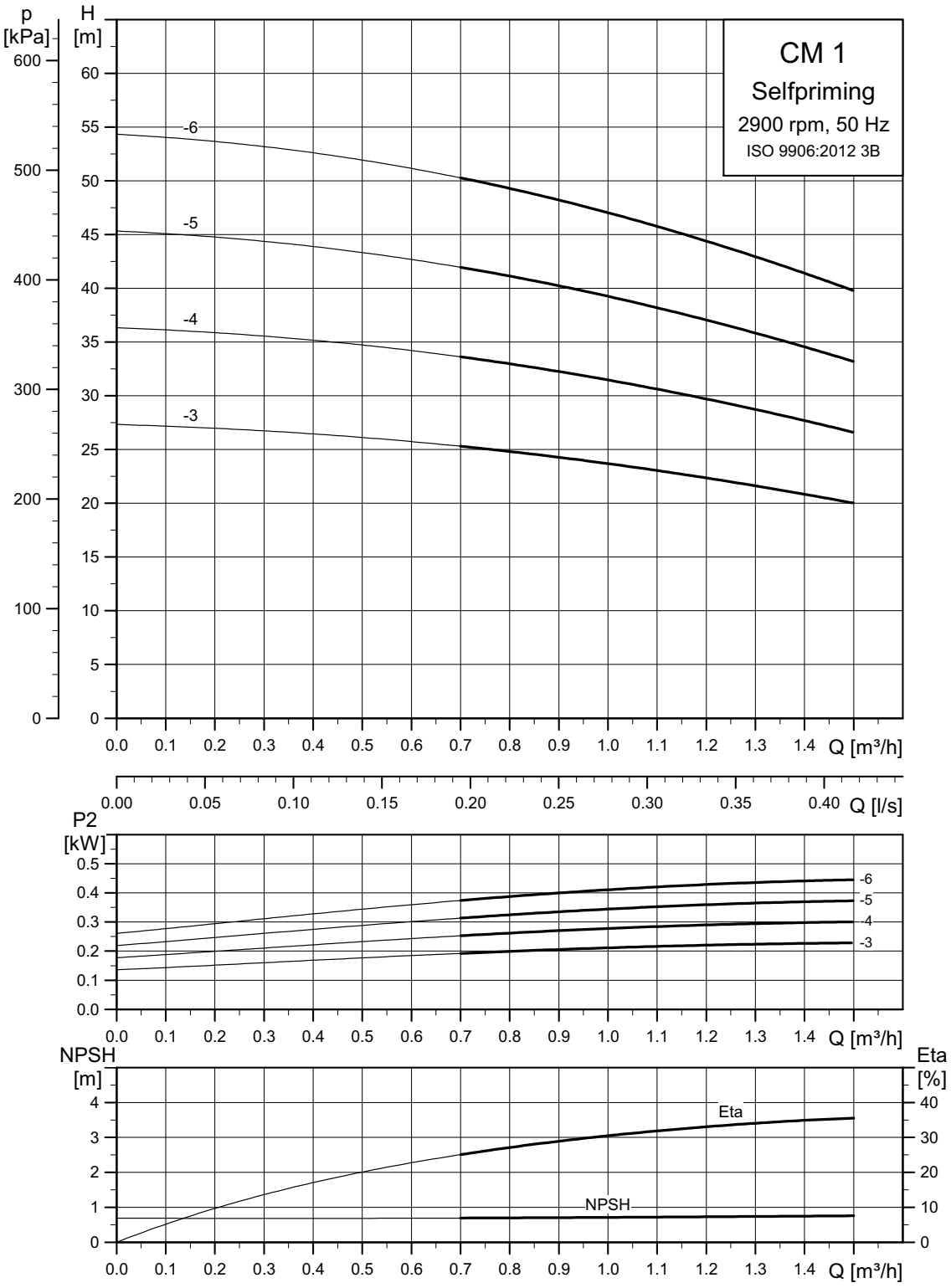

TM05 8756 3920

Pump performance is influenced by the suction lift. See page 54.

Pump performance in relation to suction lift

CM 1-3

Pump head [m]		Flow [m^3/h]						
		0	0.25	0.5	0.75	1	1.25	1.5
Suction lift [m]	0	27.3	26.9	26.1	25.1	23.7	22.0	20.0
	1	26.3	25.9	25.1	24.1	22.7	21.0	19.0
	2	25.3	24.9	24.1	23.1	21.7	20.0	18.0
	3	24.3	23.9	23.1	22.1	20.7	19.0	17.0
	4	23.3	22.9	22.1	21.1	19.7	18.0	16.0

CM 1-4

Pump head [m]		Flow [m^3/h]						
		0	0.25	0.5	0.75	1	1.25	1.5
Suction lift [m]	0	36.3	35.7	34.7	33.3	31.5	29.2	26.6
	1	35.3	34.7	33.7	32.3	30.5	28.2	25.6
	2	34.3	33.7	32.7	31.3	29.5	27.2	24.6
	3	33.3	32.7	31.7	30.3	28.5	26.2	23.6
	4	32.3	31.7	30.7	29.3	27.5	25.2	22.6

CM 1-5

Pump head [m]		Flow [m^3/h]						
		0	0.25	0.5	0.75	1	1.25	1.5
Suction lift [m]	0	45.3	44.6	43.3	41.6	39.3	36.5	33.2
	1	44.3	43.6	42.3	40.6	38.3	35.5	32.2
	2	43.3	42.6	41.3	39.6	37.3	34.5	31.2
	3	42.3	41.6	40.3	38.6	36.3	33.5	30.2
	4	41.3	40.6	39.3	37.6	35.3	32.5	29.2

CM 1-6

Pump head [m]		Flow [m^3/h]						
		0	0.25	0.5	0.75	1	1.25	1.5
Suction lift [m]	0	54.3	53.4	51.9	49.8	47.0	43.7	39.8
	1	53.3	52.4	50.9	48.8	46.0	42.7	38.8
	2	52.3	51.4	49.9	47.8	45.0	41.7	37.8
	3	51.3	50.4	48.9	46.8	44.0	40.7	36.8
	4	50.3	49.4	47.9	45.8	43.0	39.7	35.8

CM 3

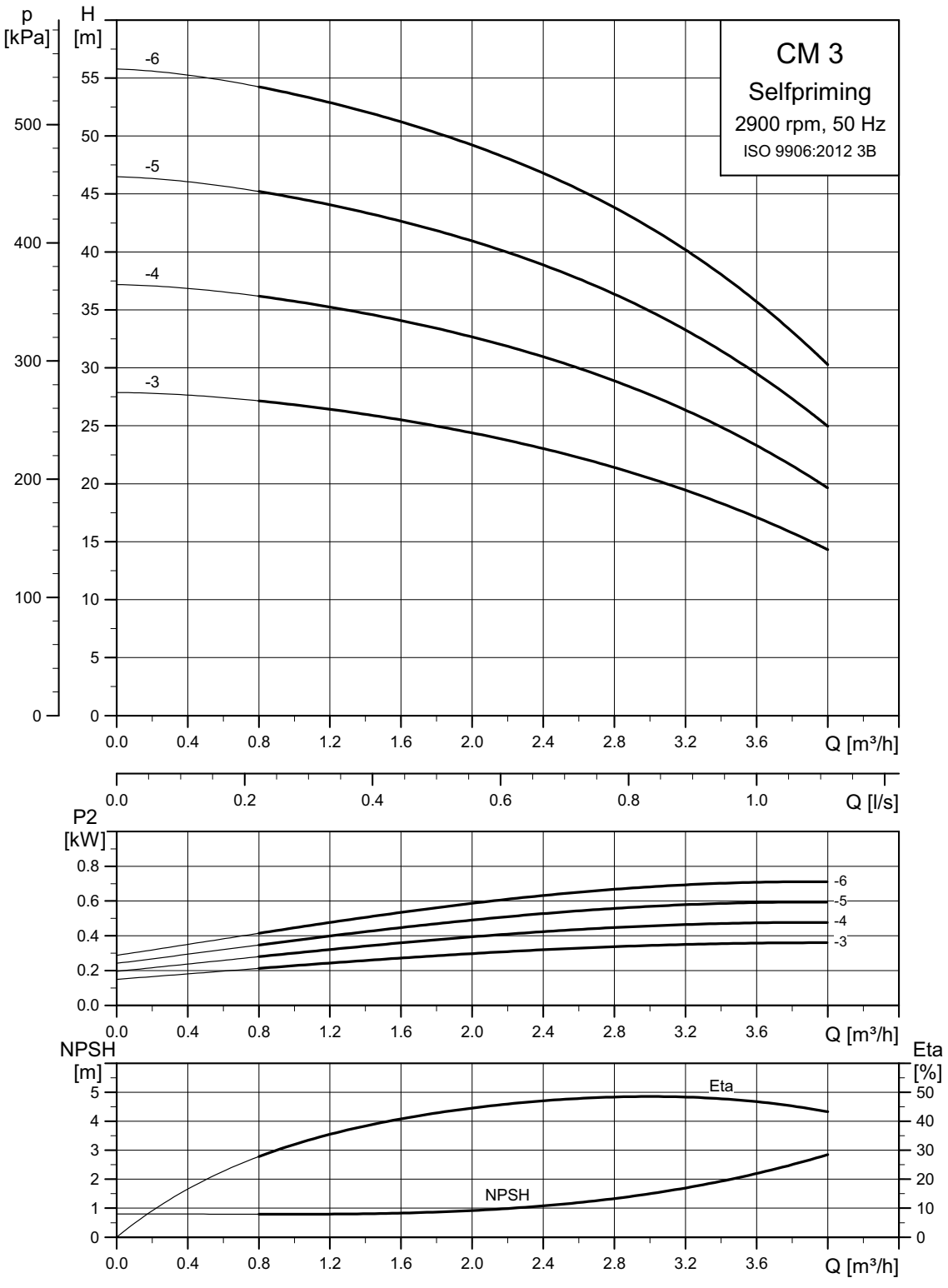

TM05 8757 3920

Pump performance is influenced by the suction lift. See page 56.

Pump performance in relation to suction lift

CM 3-3

Pump head [m]		Flow [m^3/h]								
		0	0.5	1	1.5	2	2.5	3	3.5**	4**
Suction lift [m]	0	27.9	27.5	26.8	25.8	24.4	22.7	20.5	17.7	14.3
	1	26.9	26.5	25.8	24.8	23.4	21.7	19.5	16.7	13.3
	2	25.9	25.5	24.8	23.8	22.4	20.7	18.5	15.7	12.3
	3	24.9	24.5	23.8	22.8	21.4	19.7	17.5	14.7	11.3
	4	23.9	23.5	22.8	21.8	20.4	18.7	16.5	13.7	10.3
	5*	22.9	22.5	21.8	20.8	19.4	17.7	15.5	-	-
	6*	21.9	21.5	20.8	19.8	18.4	16.7	14.5	-	-
	7*	20.9	20.5	19.8	18.8	17.4	15.7	-	-	-
	8*	19.9	19.5	18.8	17.8	-	-	-	-	-

CM 3-4

Pump head [m]		Flow [m^3/h]								
		0	0.5	1	1.5	2	2.5	3	3.5**	4**
Suction lift [m]	0	37.2	36.7	35.7	34.4	32.7	30.5	27.7	24.1	19.6
	1	36.2	35.7	34.7	33.4	31.7	29.5	26.7	23.1	18.6
	2	35.2	34.7	33.7	32.4	30.7	28.5	25.7	22.1	17.6
	3	34.2	33.7	32.7	31.4	29.7	27.5	24.7	21.1	16.6
	4	33.2	32.7	31.7	30.4	28.7	26.5	23.7	20.1	15.6
	5*	32.2	31.7	30.7	29.4	27.7	25.5	22.7	-	-
	6*	31.2	30.7	29.7	28.4	26.7	24.5	21.7	-	-
	7*	30.2	29.7	28.7	27.4	25.7	23.5	-	-	-
	8*	29.2	28.7	27.7	26.4	-	-	-	-	-

CM 3-5

Pump head [m]		Flow [m^3/h]								
		0	0.5	1	1.5	2	2.5	3	3.5**	4**
Suction lift [m]	0	46.5	45.9	44.7	43.0	40.9	38.3	34.9	30.5	25.0
	1	45.5	44.9	43.7	42.0	39.9	37.3	33.9	29.5	24.0
	2	44.5	43.9	42.7	41.0	38.9	36.3	32.9	28.5	23.0
	3	43.5	42.9	41.7	40.0	37.9	35.3	31.9	27.5	22.0
	4	42.5	41.9	40.7	39.0	36.9	34.3	30.9	26.5	21.0
	5*	41.5	40.9	39.7	38.0	35.9	33.3	29.9	-	-
	6*	40.5	39.9	38.7	37.0	34.9	32.3	28.9	-	-
	7*	39.5	38.9	37.7	36.0	33.9	31.3	-	-	-
	8*	38.5	37.9	36.7	35.0	-	-	-	-	-

CM 3-6

Pump head [m]		Flow [m^3/h]								
		0	0.5	1	1.5	2	2.5	3	3.5**	4**
Suction lift [m]	0	55.8	55.0	53.6	51.7	49.2	46.1	42.1	36.9	30.3
	1	54.8	54.0	52.6	50.7	48.2	45.1	41.1	35.9	29.3
	2	53.8	53.0	51.6	49.7	47.2	44.1	40.1	34.9	28.3
	3	52.8	52.0	50.6	48.7	46.2	43.1	39.1	33.9	27.3
	4	51.8	51.0	49.6	47.7	45.2	42.1	38.1	32.9	26.3
	5*	50.8	50.0	48.6	46.7	44.2	41.1	37.1	-	-
	6*	49.8	49.0	47.6	45.7	43.2	40.1	36.1	-	-
	7*	48.8	48.0	46.6	44.7	42.2	39.1	-	-	-
	8*	47.8	47.0	45.6	43.7	-	-	-	-	-

Depending on the pump model, the maximum suction depth varies between 7.5 and 8.5 m.

* Only available in O-version.

** Only available in S-version.

CM 5

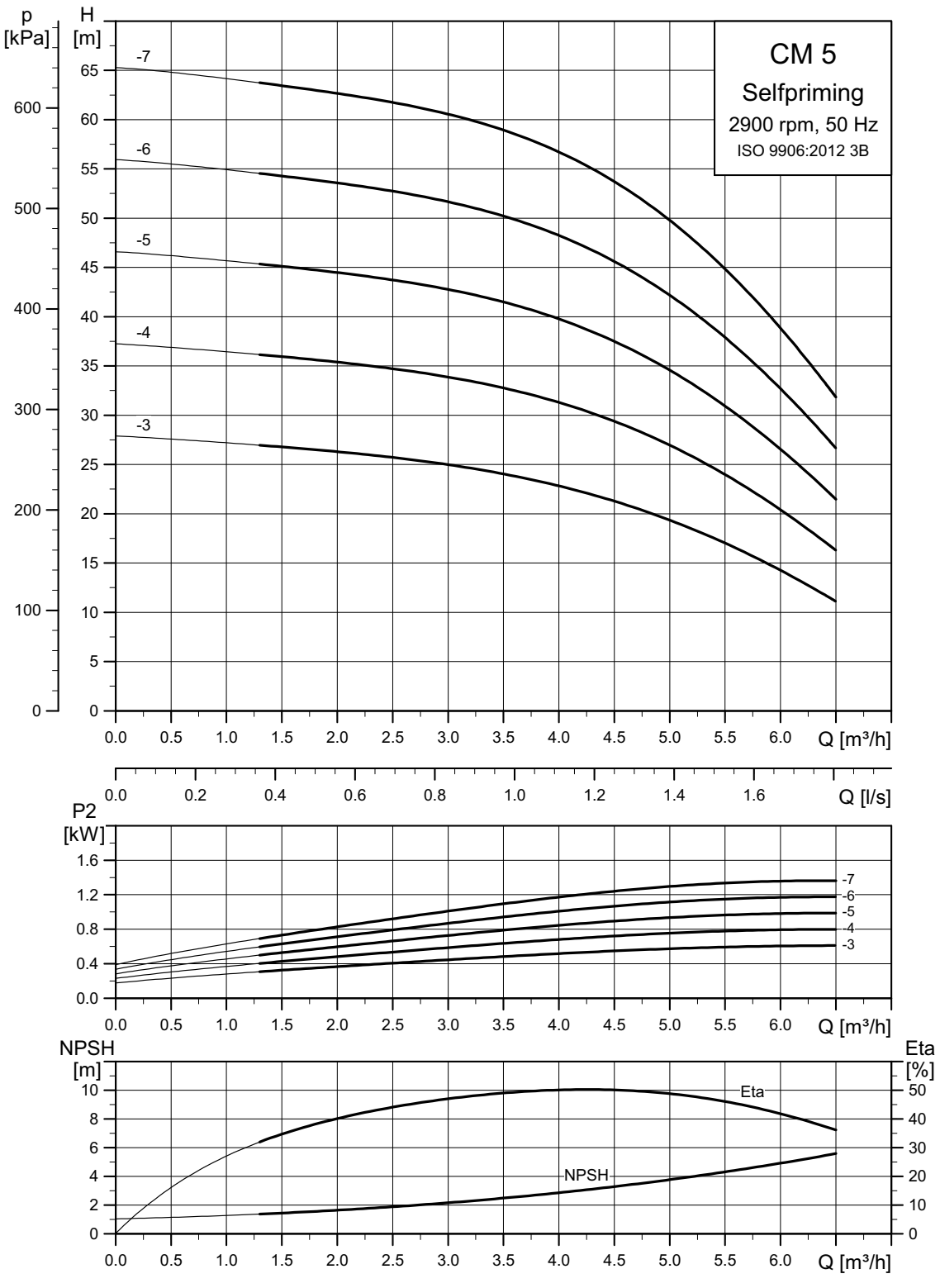

TM05 8758 3920

Pump performance is influenced by the suction lift. See page 58.

Pump performance in relation to suction lift

CM 5-3

Pump head [m]		Flow [m^3/h]													
		0	0.5	1	1.5	2	2.5	3	3.5	4	4.5	5	5.5**	6**	6.5**
Suction lift [m]	0	27.9	27.6	27.2	26.8	26.3	25.7	25.0	24.0	22.8	21.3	19.4	17.0	14.3	11.1
	1	26.9	26.6	26.2	25.8	25.3	24.7	24.0	23.0	21.8	20.3	18.4	16.0	13.3	10.1
	2	25.9	25.6	25.2	24.8	24.3	23.7	23.0	22.0	20.8	19.3	17.4	15.0	12.3	-
	3	24.9	24.6	24.2	23.8	23.3	22.7	22.0	21.0	19.8	18.3	16.4	-	-	-
	4	23.9	23.6	23.2	22.8	22.3	21.7	21.0	20.0	18.8	17.3	-	-	-	-
	5*	22.9	22.6	22.2	21.8	21.3	20.7	20.0	19.0	17.8	-	-	-	-	-
	6*	21.9	21.6	21.2	20.8	20.3	19.7	19.0	-	-	-	-	-	-	-
	7*	20.9	20.6	20.2	19.8	19.3	-	-	-	-	-	-	-	-	-
	8*	19.9	19.6	19.2	18.8	-	-	-	-	-	-	-	-	-	-

CM 5-4

Pump head [m]		Flow [m^3/h]													
		0	0.5	1	1.5	2	2.5	3	3.5	4	4.5	5	5.5**	6**	6.5**
Suction lift [m]	0	37.3	36.9	36.4	35.9	35.4	34.7	33.9	32.8	31.3	29.4	27.0	24.0	20.4	16.3
	1	36.3	35.9	35.4	34.9	34.4	33.7	32.9	31.8	30.3	28.4	26.0	23.0	19.4	15.3
	2	35.3	34.9	34.4	33.9	33.4	32.7	31.9	30.8	29.3	27.4	25.0	22.0	18.4	-
	3	34.3	33.9	33.4	32.9	32.4	31.7	30.9	29.8	28.3	26.4	24.0	-	-	-
	4	33.3	32.9	32.4	31.9	31.4	30.7	29.9	28.8	27.3	25.4	-	-	-	-
	5*	32.3	31.9	31.4	30.9	30.4	29.7	28.9	27.8	26.3	-	-	-	-	-
	6*	31.3	30.9	30.4	29.9	29.4	28.7	27.9	-	-	-	-	-	-	-
	7*	30.3	29.9	29.4	28.9	28.4	-	-	-	-	-	-	-	-	-
	8*	29.3	28.9	28.4	27.9	-	-	-	-	-	-	-	-	-	-

CM 5-5

Pump head [m]		Flow [m^3/h]													
		0	0.5	1	1.5	2	2.5	3	3.5	4	4.5	5	5.5**	6**	6.5**
Suction lift [m]	0	46.6	46.2	45.7	45.1	44.5	43.7	42.8	41.5	39.8	37.5	34.6	30.9	26.5	21.5
	1	45.6	45.2	44.7	44.1	43.5	42.7	41.8	40.5	38.8	36.5	33.6	29.9	25.5	20.5
	2	44.6	44.2	43.7	43.1	42.5	41.7	40.8	39.5	37.8	35.5	32.6	28.9	24.5	-
	3	43.6	43.2	42.7	42.1	41.5	40.7	39.8	38.5	36.8	34.5	31.6	-	-	-
	4	42.6	42.2	41.7	41.1	40.5	39.7	38.8	37.5	35.8	33.5	-	-	-	-
	5*	41.6	41.2	40.7	40.1	39.5	38.7	37.8	36.5	34.8	-	-	-	-	-
	6*	40.6	40.2	39.7	39.1	38.5	37.7	36.8	-	-	-	-	-	-	-
	7*	39.6	39.2	38.7	38.1	37.5	-	-	-	-	-	-	-	-	-
	8*	38.6	38.2	37.7	37.1	-	-	-	-	-	-	-	-	-	-

Depending on the pump model, the maximum suction depth varies between 7.5 and 8.5 m.

* Only available in O-version.

** Only available in S-version.

CM 5-6

Pump head [m]		Flow [m^3/h]													
		0	0.5	1	1.5	2	2.5	3	3.5	4	4.5	5	5.5**	6**	6.5**
Suction lift [m]	0	55.9	55.5	54.9	54.3	53.6	52.7	51.7	50.2	48.2	45.6	42.2	37.9	32.7	26.6
	1	54.9	54.5	53.9	53.3	52.6	51.7	50.7	49.2	47.2	44.6	41.2	36.9	31.7	25.6
	2	53.9	53.5	52.9	52.3	51.6	50.7	49.7	48.2	46.2	43.6	40.2	35.9	30.7	-
	3	52.9	52.5	51.9	51.3	50.6	49.7	48.7	47.2	45.2	42.6	39.2	-	-	-
	4	51.9	51.5	50.9	50.3	49.6	48.7	47.7	46.2	44.2	41.6	-	-	-	-
	5*	50.9	50.5	49.9	49.3	48.6	47.7	46.7	45.2	43.2	-	-	-	-	-
	6*	49.9	49.5	48.9	48.3	47.6	46.7	45.7	-	-	-	-	-	-	-
	7*	48.9	48.5	47.9	47.3	46.6	-	-	-	-	-	-	-	-	-
	8*	47.9	47.5	46.9	46.3	-	-	-	-	-	-	-	-	-	-

CM 5-7

Pump head [m]		Flow [m^3/h]													
		0	0.5	1	1.5	2	2.5	3	3.5	4	4.5	5	5.5**	6**	6.5**
Suction lift [m]	0	65.3	64.8	64.2	63.4	62.7	61.7	60.6	58.9	56.7	53.7	49.8	44.8	38.8	31.1
	1	64.3	63.8	63.2	62.4	61.7	60.7	59.6	57.9	55.7	52.7	48.8	43.8	37.8	30.1
	2	63.3	62.8	62.2	61.4	60.7	59.7	58.6	56.9	54.7	51.7	47.8	42.8	36.8	-
	3	62.3	61.8	61.2	60.4	59.7	58.7	57.6	55.9	53.7	50.7	46.8	-	-	-
	4	61.3	60.8	60.2	59.4	58.7	57.7	56.6	54.9	52.7	49.7	-	-	-	-
	5*	60.3	59.8	59.2	58.4	57.7	56.7	55.6	53.9	51.7	-	-	-	-	-
	6*	59.3	58.8	58.2	57.4	56.7	55.7	54.6	-	-	-	-	-	-	-
	7*	58.3	57.8	57.2	56.4	55.7	-	-	-	-	-	-	-	-	-
	8*	57.3	56.8	56.2	55.4	-	-	-	-	-	-	-	-	-	-

Depending on the pump model, the maximum suction depth varies between 7.5 and 8.5 m.
* Only available in O-version.
** Only available in S-version.

20. Performance curves, CM self-priming, 60 Hz

CM 1

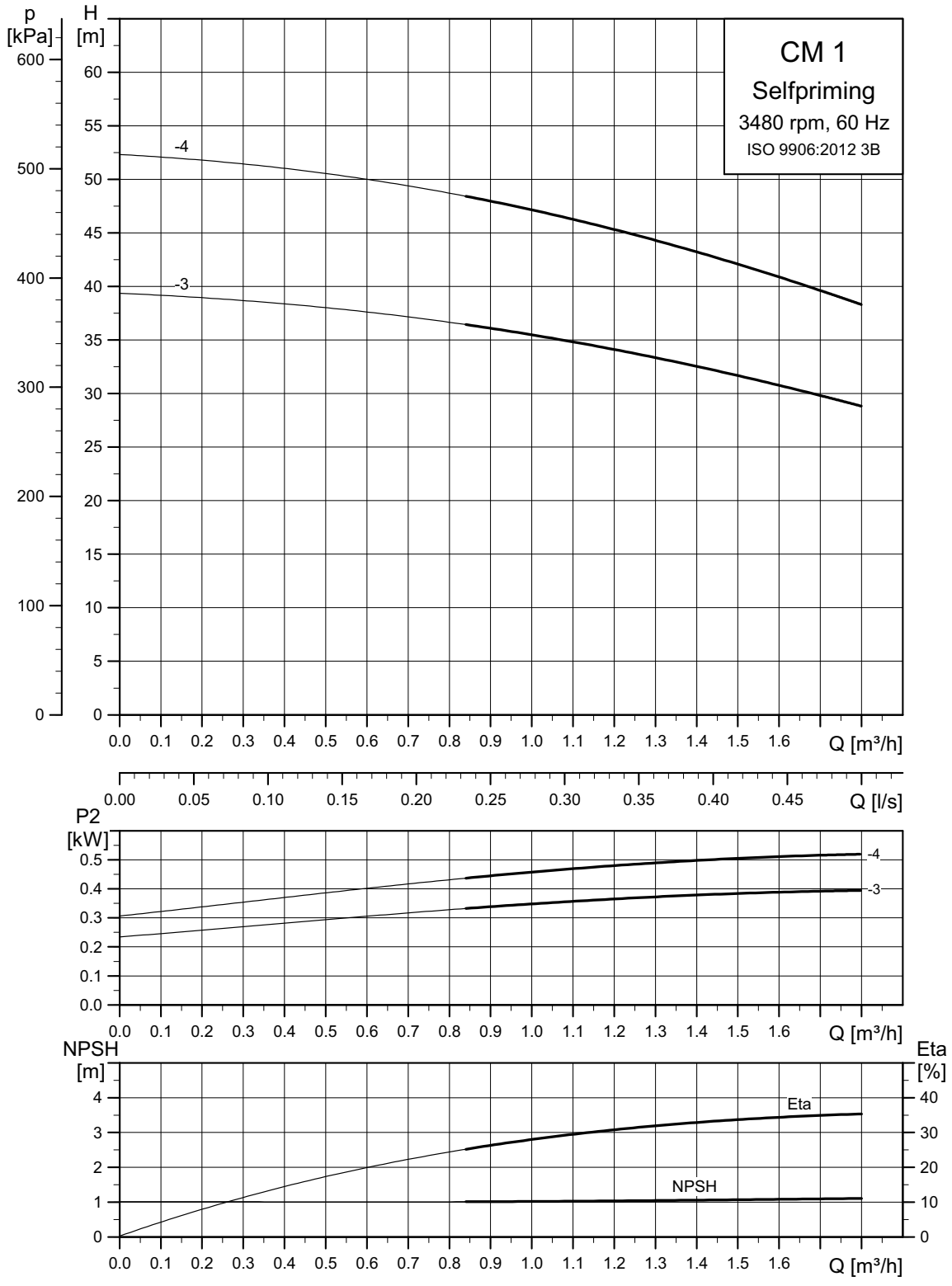

TM05 8793 3920

Pump performance is influenced by the suction lift. See page 61.

Pump performance in relation to suction lift

CM 1-3

Pump head [m]		Flow [m^3/h]										
		0	0.25	0.5	0.75	1	1.25	1.5	1.75	2	2.25	2.5
Suction lift [m]	0	39.4	38.8	38.0	36.9	35.5	33.7	31.7	29.3	26.7	23.8	20.8
	1	38.4	37.8	37.0	35.9	34.5	32.7	30.7	28.3	25.7	22.8	19.8
	2	37.4	36.8	36.0	34.9	33.5	31.7	29.7	27.3	24.7	21.8	18.8
	3	36.4	35.8	35.0	33.9	32.5	30.7	28.7	26.3	23.7	20.8	17.8
	4	35.4	34.8	34.0	32.9	31.5	29.7	27.7	25.3	22.7	19.8	16.8

CM 1-4

Pump head [m]		Flow [m^3/h]										
		0	0.25	0.5	0.75	1	1.25	1.5	1.75	2	2.25	2.5
Suction lift [m]	0	52.3	51.6	50.5	49.1	47.2	44.8	42.1	39.0	35.5	31.7	27.7
	1	51.3	50.6	49.5	48.1	46.2	43.8	41.1	38.0	34.5	30.7	26.7
	2	50.3	49.6	48.5	47.1	45.2	42.8	40.1	37.0	33.5	29.7	25.7
	3	49.3	48.6	47.5	46.1	44.2	41.8	39.1	36.0	32.5	28.7	24.7
	4	48.3	47.6	46.5	45.1	43.2	40.8	38.1	35.0	31.5	27.7	23.7

CM 3

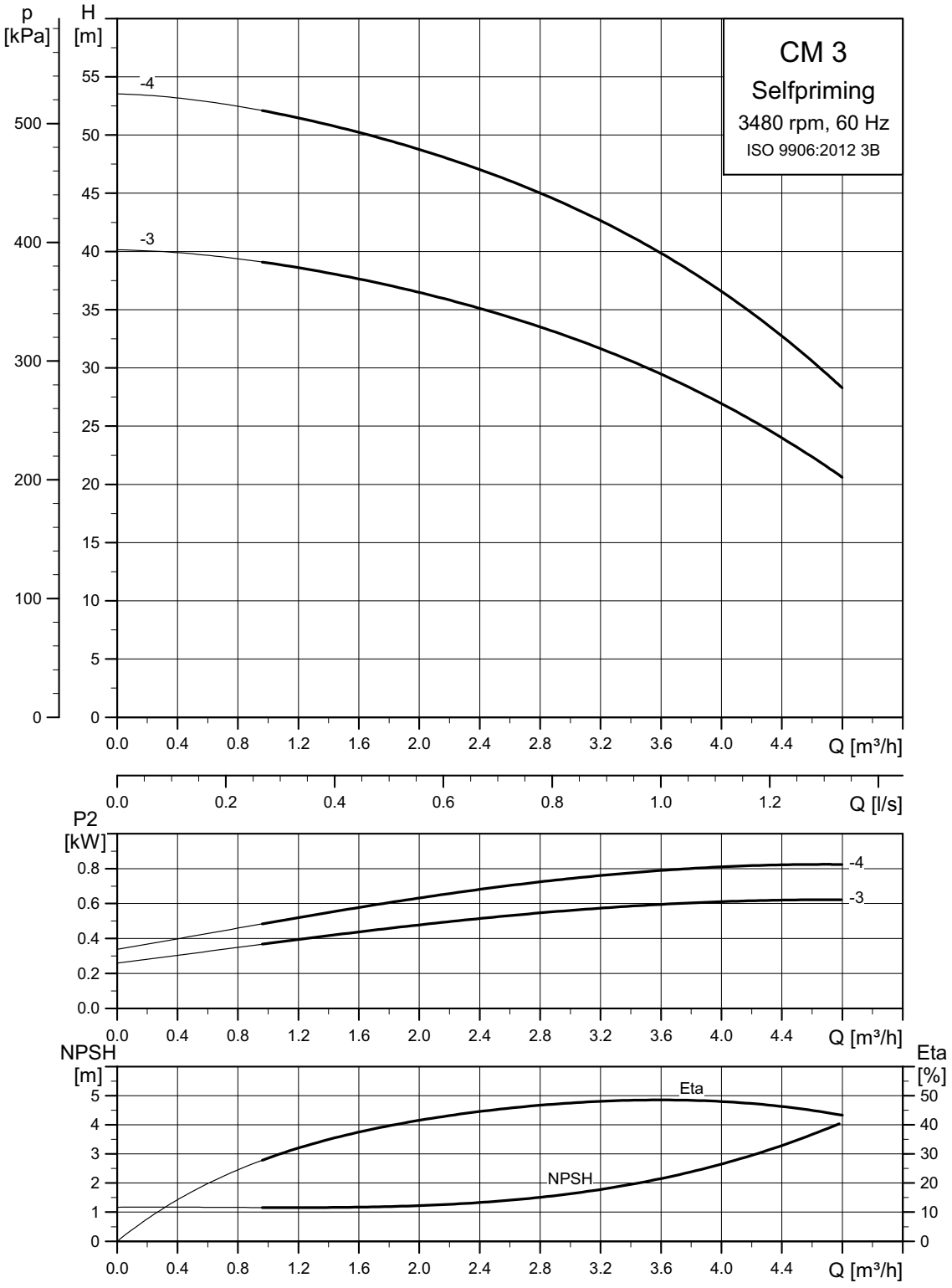

TM05 8794 3920

Pump performance is influenced by the suction lift. See page 63.

Pump performance in relation to suction lift

CM 3-3

Pump head [m]		Flow [m^3/h]										
		0	0.5	1	1.5	2	2.5	3	3.5	4**	4.5**	5**
Suction lift [m]	0	40.1	39.8	39.0	37.9	36.5	34.7	32.6	30.1	26.9	23.2	18.7
	1	39.1	38.8	38.0	36.9	35.5	33.7	31.6	29.1	25.9	22.2	17.7
	2	38.1	37.8	37.0	35.9	34.5	32.7	30.6	28.1	24.9	21.2	16.7
	3	37.1	36.8	36.0	34.9	33.5	31.7	29.6	27.1	23.9	20.2	-
	4	36.1	35.8	35.0	33.9	32.5	30.7	28.6	26.1	22.9	-	-
	5*	35.1	34.8	34.0	32.9	31.5	29.7	27.6	-	-	-	-
	6*	34.1	33.8	33.0	31.9	30.5	28.7	26.6	-	-	-	-
	7*	33.1	32.8	32.0	30.9	29.5	27.7	-	-	-	-	-
	8*	32.1	31.8	31.0	29.9	-	-	-	-	-	-	-

CM 3-4

Pump head [m]		Flow [m^3/h]										
		0	0.5	1	1.5	2	2.5	3	3.5	4**	4.5**	5**
Suction lift [m]	0	53.5	53.0	52.0	50.6	48.8	46.6	43.9	40.6	36.6	31.7	25.8
	1	52.5	52.0	51.0	49.6	47.8	45.6	42.9	39.6	35.6	30.7	24.8
	2	51.5	51.0	50.0	48.6	46.8	44.6	41.9	38.6	34.6	29.7	23.8
	3	50.5	50.0	49.0	47.6	45.8	43.6	40.9	37.6	33.6	28.7	-
	4	49.5	49.0	48.0	46.6	44.8	42.6	39.9	36.6	32.6	-	-
	5*	48.5	48.0	47.0	45.6	43.8	41.6	38.9	-	-	-	-
	6*	47.5	47.0	46.0	44.6	42.8	40.6	37.9	-	-	-	-
	7*	46.5	46.0	45.0	43.6	41.8	39.6	-	-	-	-	-
	8*	45.5	45.0	44.0	42.6	-	-	-	-	-	-	-

Depending on the pump model, the maximum suction depth varies between 7.5 and 8.5 m.

* Only available in O-version.

** Only available in S-version.

CM 5

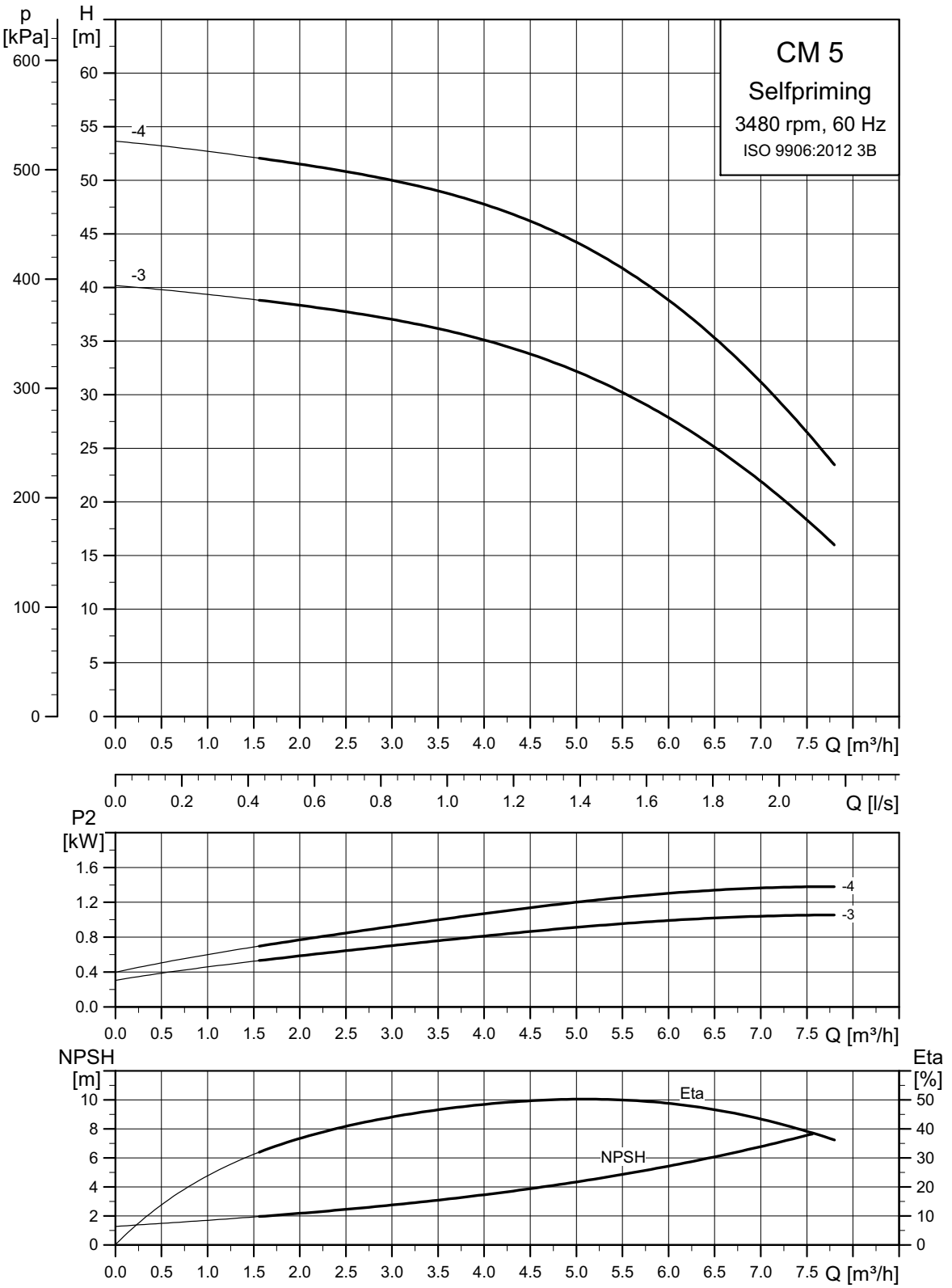

TM05 8795 3920

Pump performance is influenced by the suction lift. See page 65.

Pump performance in relation to suction lift

CM 5-3

Pump head [m]		Flow [m^3/h]															
		0	0.5	1	1.5	2	2.5	3	3.5	4	4.5	5	5.5	6	6.5**	7**	7.5**
Suction lift [m]	0	40.2	39.8	39.4	38.9	38.3	37.7	37.0	36.2	35.1	33.8	32.2	30.2	27.9	25.1	21.9	18.3
	1	39.2	38.8	38.4	37.9	37.3	36.7	36.0	35.2	34.1	32.8	31.2	29.2	26.9	24.1	-	-
	2	38.2	37.8	37.4	36.9	36.3	35.7	35.0	34.2	33.1	31.8	30.2	28.2	25.9	-	-	-
	3	37.2	36.8	36.4	35.9	35.3	34.7	34.0	33.2	32.1	30.8	29.2	-	-	-	-	-
	4	36.2	35.8	35.4	34.9	34.3	33.7	33.0	32.2	31.1	29.8		-	-	-	-	-
	5*	35.2	34.8	34.4	33.9	33.3	32.7	32.0	31.2	30.1	-	-	-	-	-	-	-
	6*	34.2	33.8	33.4	32.9	32.3	31.7	31.0	-	-	-	-	-	-	-	-	-
	7*	33.2	32.8	32.4	31.9	31.3	-	-	-	-	-	-	-	-	-	-	-
	8*	32.2	31.8	31.4	30.9	-	-	-	-	-	-	-	-	-	-	-	-

CM 5-4

Pump head [m]		Flow [m^3/h]															
		0	0.5	1	1.5	2	2.5	3	3.5	4	4.5	5	5.5	6	6.5**	7**	7.5**
Suction lift [m]	0	53.6	53.2	52.7	52.1	51.5	50.8	50.0	49.0	47.8	46.2	44.2	41.8	38.8	35.3	31.2	26.5
	1	52.6	52.2	51.7	51.1	50.5	49.8	49.0	48.0	46.8	45.2	43.2	40.8	37.8	34.3	-	-
	2	51.6	51.2	50.7	50.1	49.5	48.8	48.0	47.0	45.8	44.2	42.2	39.8	36.8	-	-	-
	3	50.6	50.2	49.7	49.1	48.5	47.8	47.0	46.0	44.8	43.2	41.2	-	-	-	-	-
	4	49.6	49.2	48.7	48.1	47.5	46.8	46.0	45.0	43.8	42.2	-	-	-	-	-	-
	5*	48.6	48.2	47.7	47.1	46.5	45.8	45.0	44.0	42.8	-	-	-	-	-	-	-
	6*	47.6	47.2	46.7	46.1	45.5	44.8	44.0	-	-	-	-	-	-	-	-	-
	7*	46.6	46.2	45.7	45.1	44.5	-	-	-	-	-	-	-	-	-	-	-
	8*	45.6	45.2	44.7	44.1	-	-	-	-	-	-	-	-	-	-	-	-

Depending on the pump model, the maximum suction depth varies between 7.5 and 8.5 m.

* Only available in O-version.

** Only available in S-version.

21. Performance curves, CME 50/60 Hz

CME 1

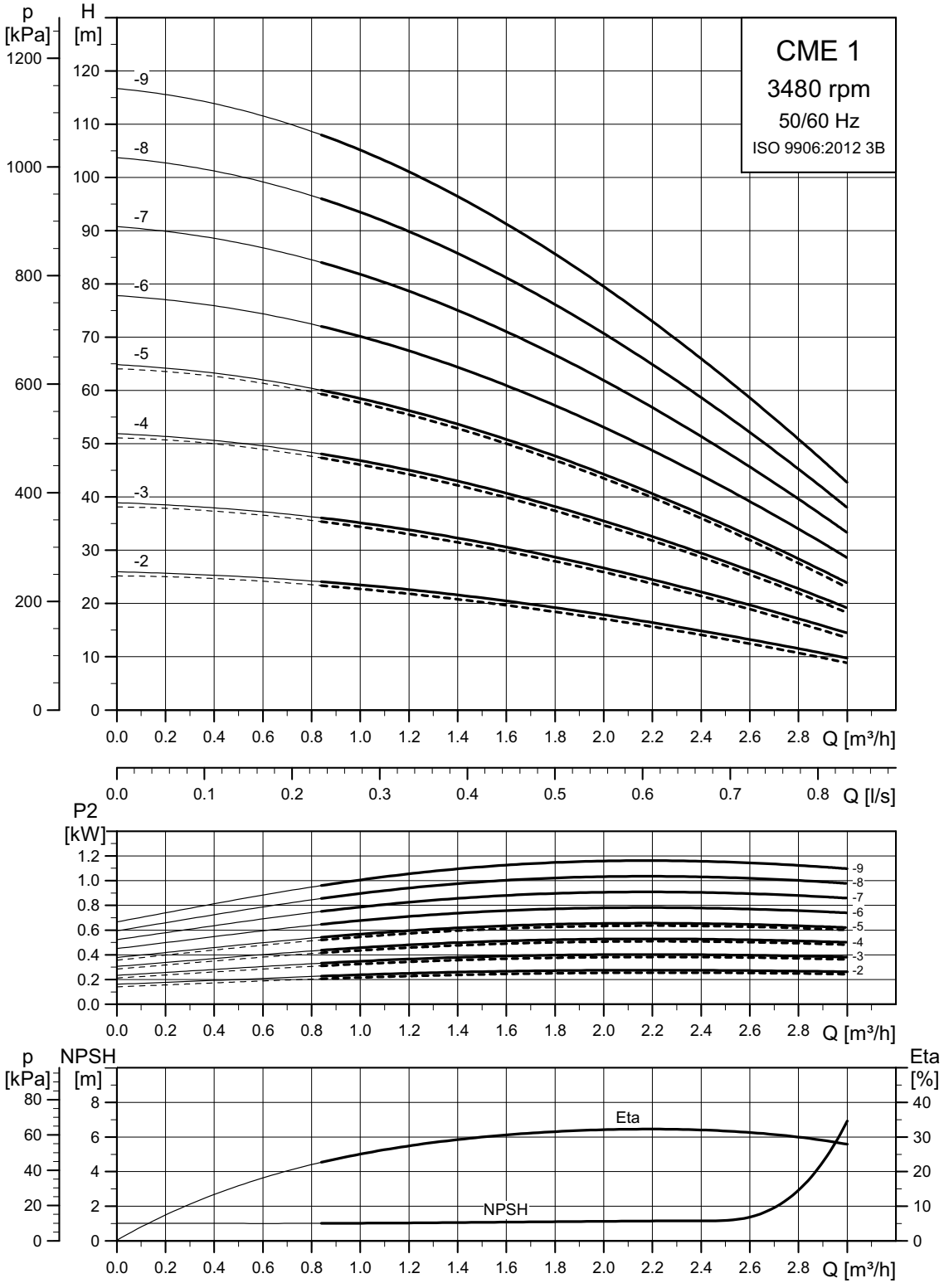

TM04 3569 3920

CME-A

CME-I/G

Irrespective of the input frequency, the 100 % speed of CME pumps is approximately 3400 min^{-1}.

CME 3

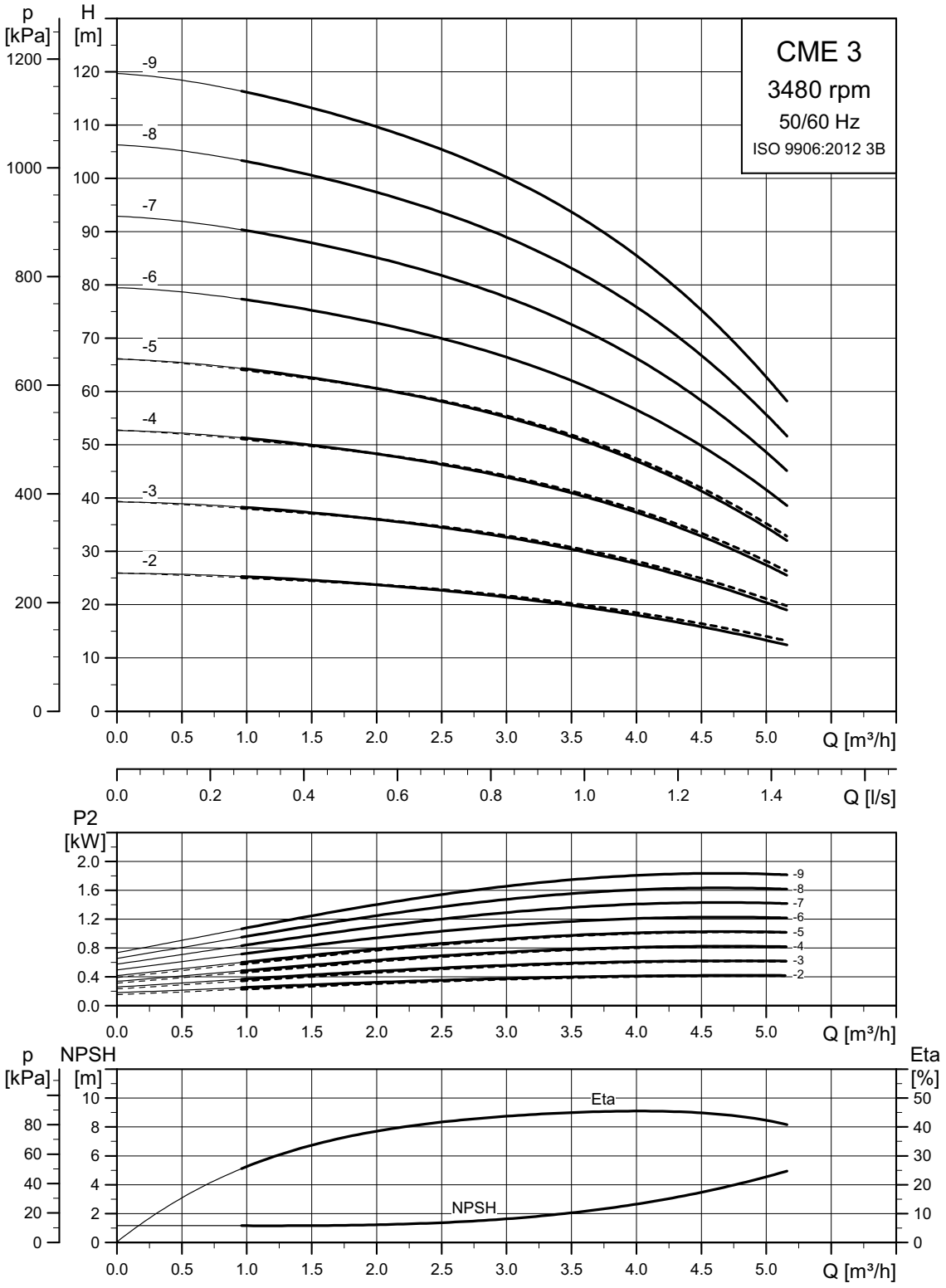

TM04 3570 3920

CME-A

CME-I/G

Irrespective of the input frequency, the 100 % speed of CME pumps is approximately 3400 min^{-1}.

CME 5

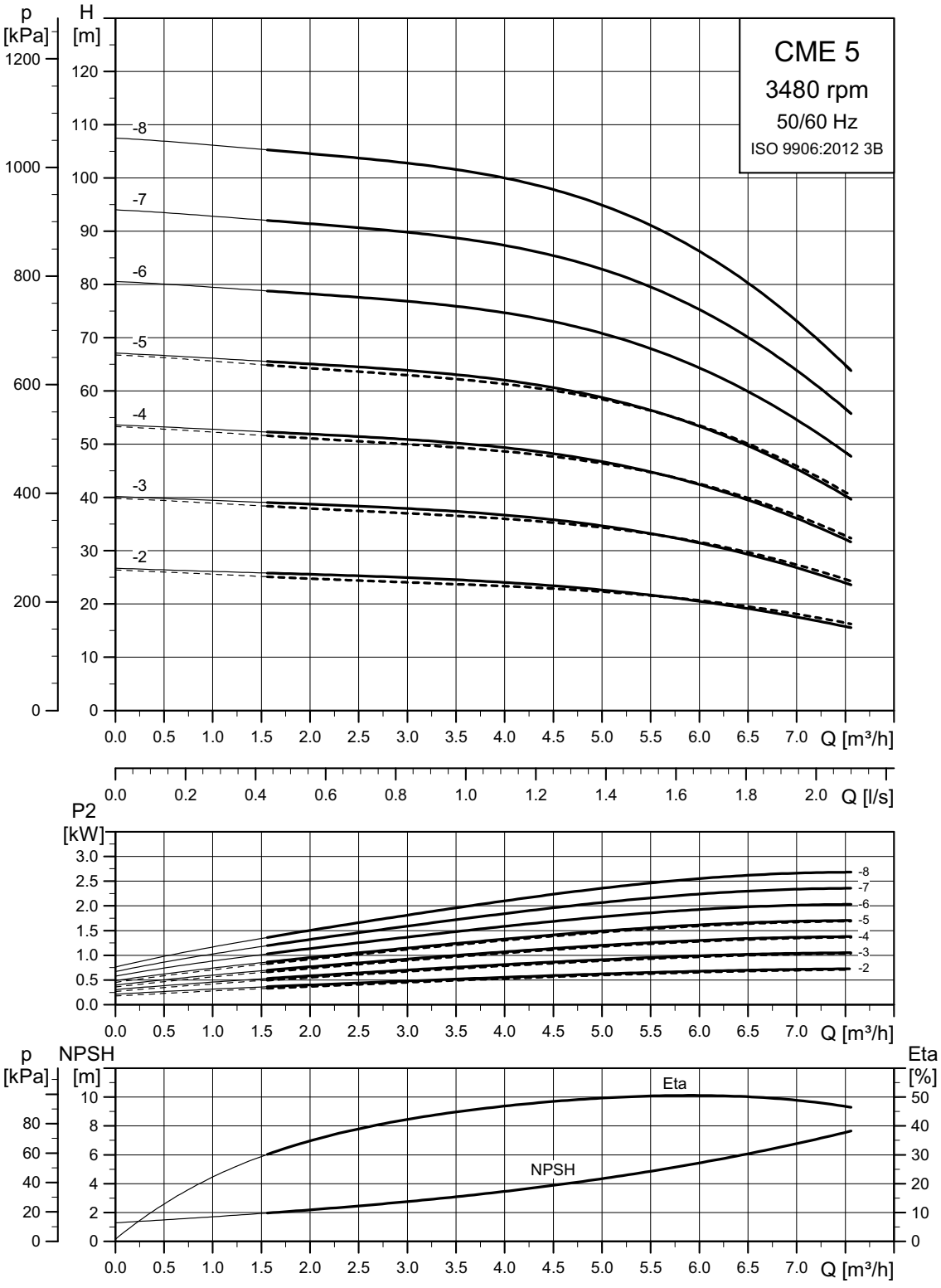

TM04 3571 3920

CME-A

CME-I/G

Irrespective of the input frequency, the 100 % speed of CME pumps is approximately 3400 min^{-1}.

CME 10

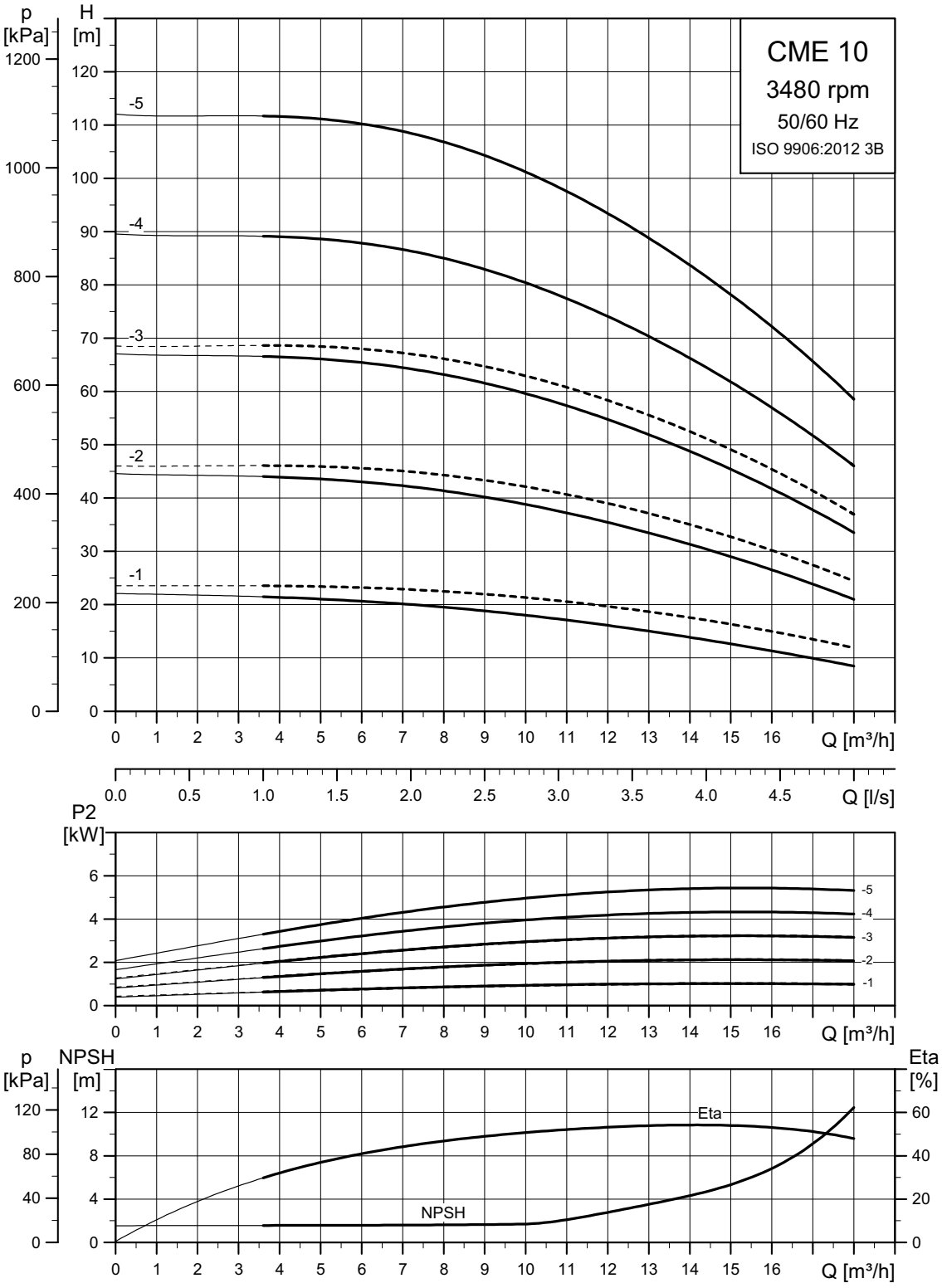

TM04 3572 3920

CME-A

CME-I/G

Irrespective of the input frequency, the 100 % speed of CME pumps is approximately 3400 min^{-1}.

CME 15

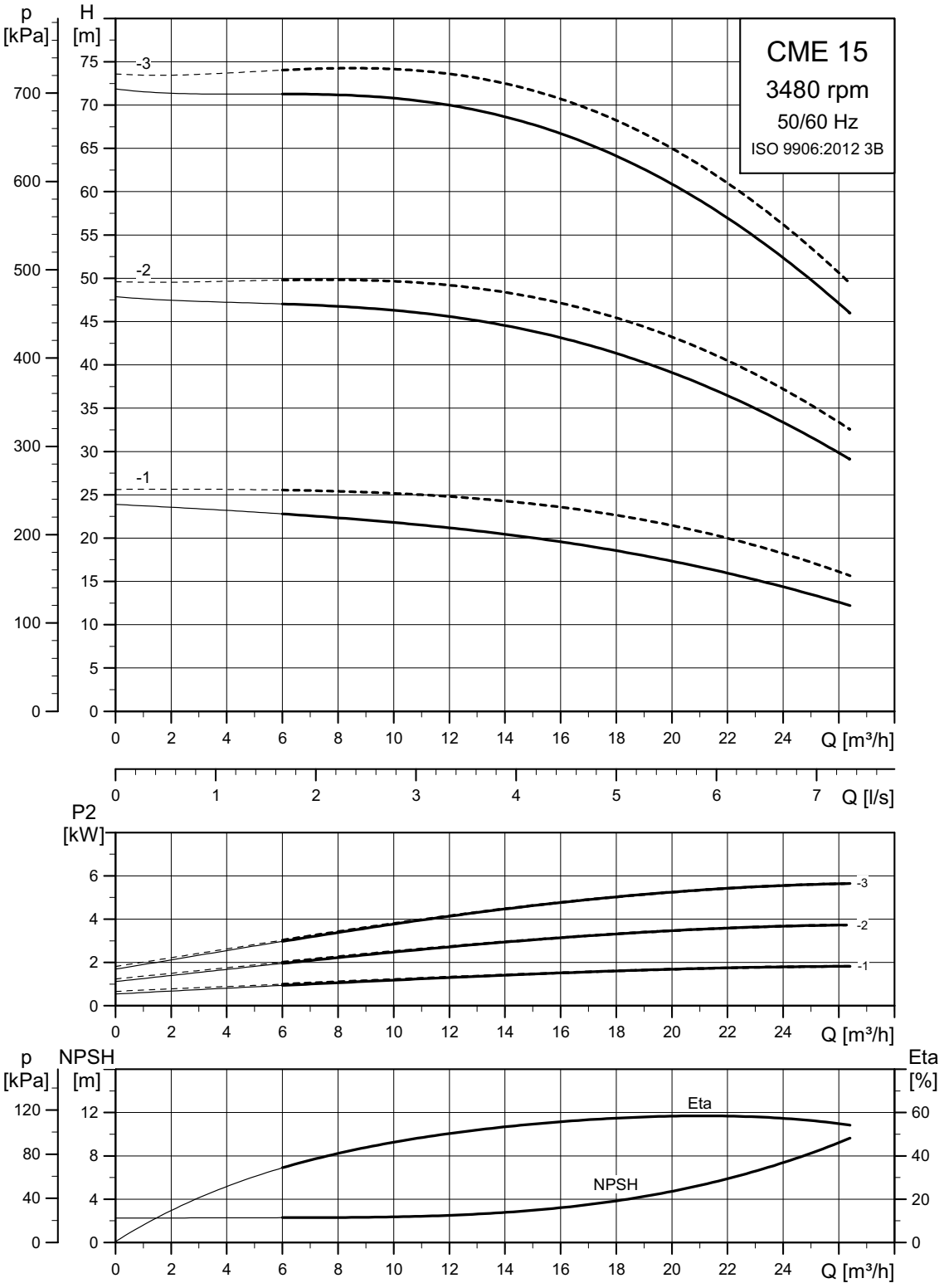

TM04 3573 3920

CME-A

CME-I/G

Irrespective of the input frequency, the 100 % speed of CME pumps is approximately 3400 min^{-1}.

CME 25

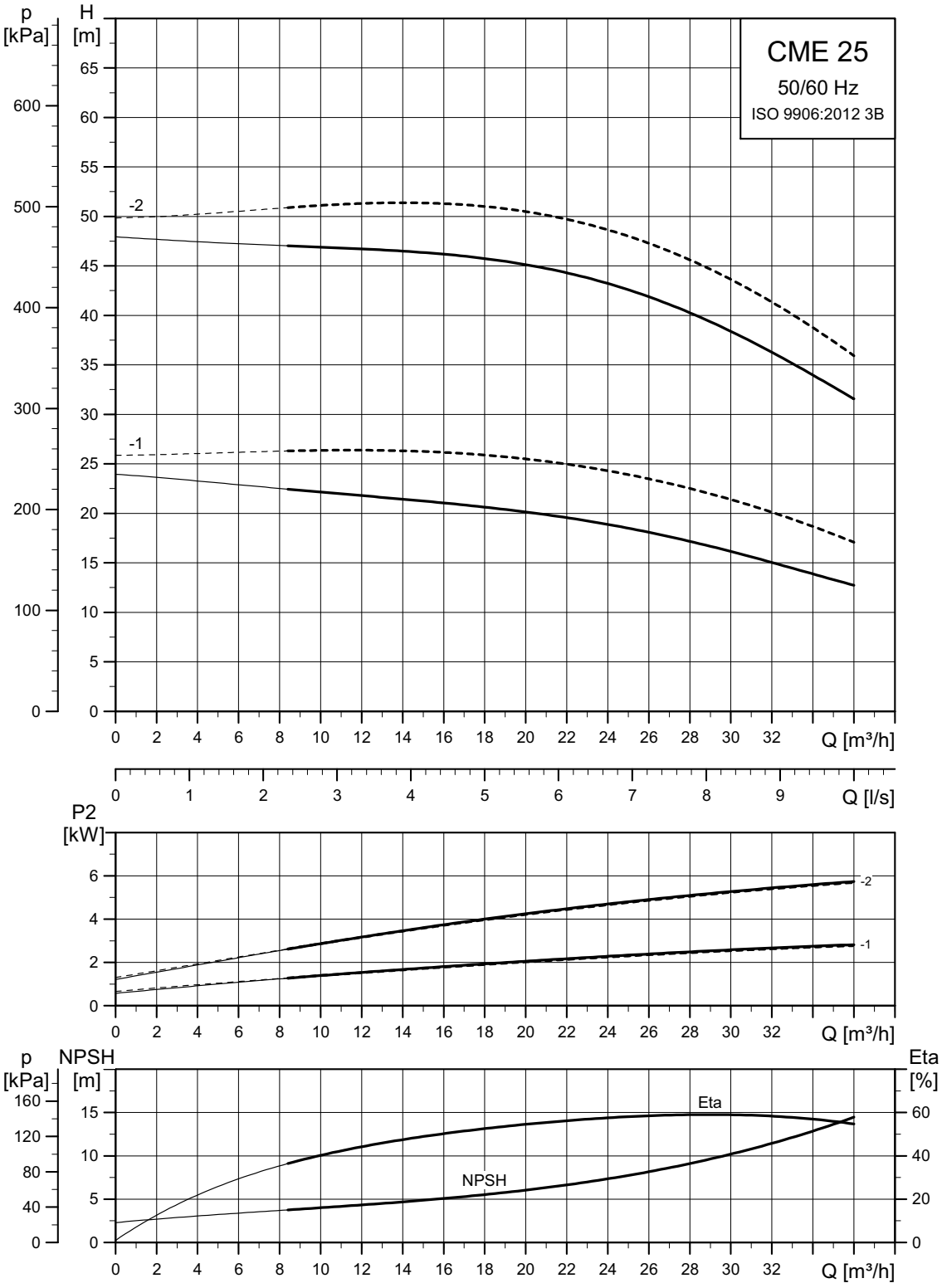

TM04 3574 3920

CME-A

CME-I/G

Irrespective of the input frequency, the 100 % speed of CME pumps is approximately 3400 min^{-1}.

22. Dimensions, CM 50 Hz

CM 1-A

(A = cast iron EN-GJL-200)

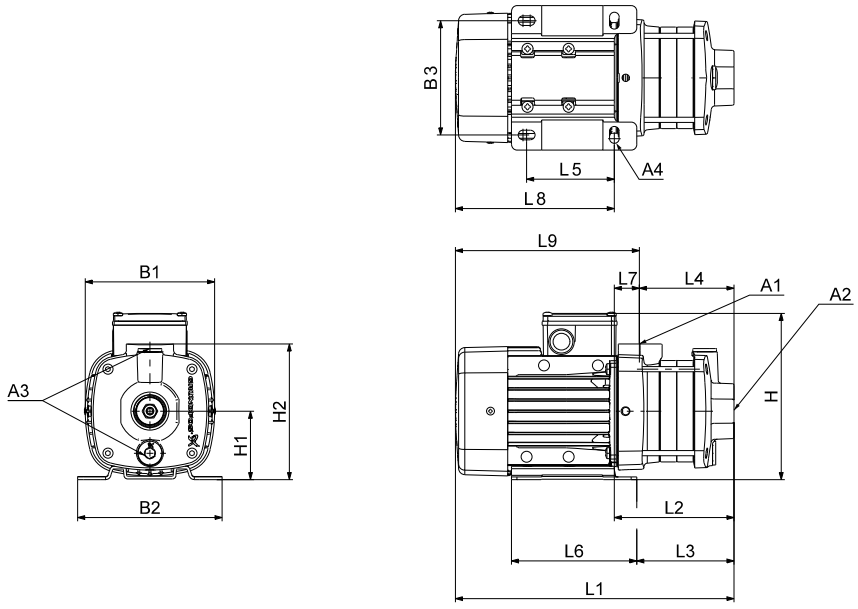

TM06 7509 3616

Dimensions

3 x 220-240/380-415 V, 50 Hz (supply voltage F)

Pump type	Frame size	P_2 [kW]	Dimensions [mm]																		
			A1	A2	A3	A4	B1	B2	B3	H	H1	H2	L1	L2	L3	L4	L5	L6	L7	L8	L9
CM1-2	71	0.46	1"	1"	3/8"	10.5	141	158	125	184	75	149	286	112	88	85	96	137	27	174	201
CM1-3	71	0.46	1"	1"	3/8"	10.5	141	158	125	184	75	149	304	130	106	103	96	137	27	174	201
CM1-4	71	0.46	1"	1"	3/8"	10.5	141	158	125	184	75	149	322	148	124	121	96	137	27	174	201
CM1-5	71	0.46	1"	1"	3/8"	10.5	141	158	125	184	75	149	340	166	142	139	96	137	27	174	201
CM1-6	71	0.46	1"	1"	3/8"	10.5	141	158	125	184	75	149	358	184	160	157	96	137	27	174	201
CM1-7	71	0.65	1"	1"	3/8"	10.5	141	158	125	184	75	149	376	202	178	175	96	137	27	174	201
CM1-8	71	0.65	1"	1"	3/8"	10.5	141	158	125	184	75	149	394	220	196	193	96	137	27	174	201

1 x 220-240 V, 50 Hz (supply voltage C)

Pump type	Frame size	P_2 [kW]	Dimensions [mm]																		
			A1	A2	A3	A4	B1	B2	B3	H	H1	H2	L1	L2	L3	L4	L5	L6	L7	L8	L9
CM1-2	71	0.30	1"	1"	3/8"	10.5	141	158	125	208	75	149	286	112	88	85	96	137	27	174	201
CM1-3	71	0.30	1"	1"	3/8"	10.5	141	158	125	208	75	149	304	130	106	103	96	137	27	174	201
CM1-4	71	0.50	1"	1"	3/8"	10.5	141	158	125	208	75	149	322	148	124	121	96	137	27	174	201
CM1-5	71	0.50	1"	1"	3/8"	10.5	141	158	125	208	75	149	340	166	142	139	96	137	27	174	201
CM1-6	71	0.50	1"	1"	3/8"	10.5	141	158	125	208	75	149	358	184	160	157	96	137	27	174	201
CM1-7	71	0.50	1"	1"	3/8"	10.5	141	158	125	208	75	149	376	202	178	175	96	137	27	174	201
CM1-8	80	0.67	1"	1"	3/8"	10.5	141	158	125	208	75	149	434	220	196	193	96	137	27	214	241

All dimensions are in mm unless otherwise stated.

CM 1-I and CM 1-G

(I = EN 1.4301/AISI 304 and G = EN 1.4401/AISI 316)

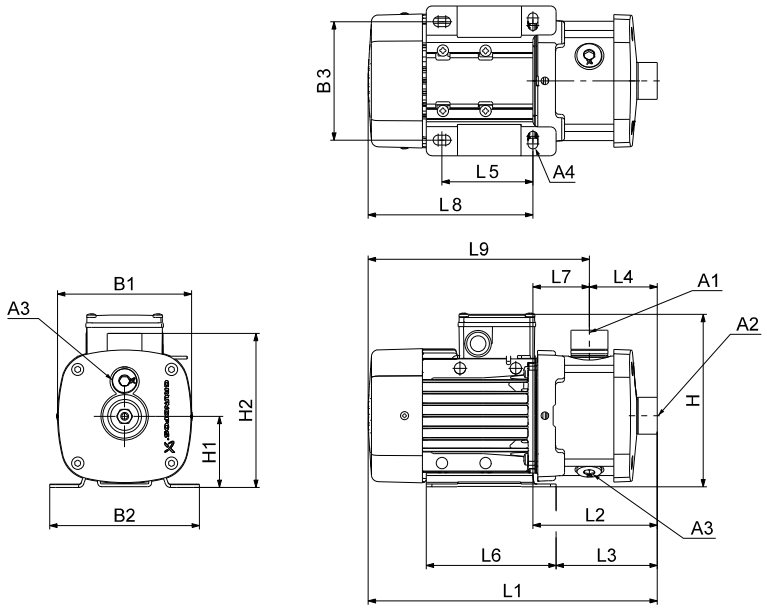

TM06 7507 3616

Dimensions

3 x 220-240/380-415 V, 50 Hz (supply voltage F)

Pump type	Frame size	P_2 [kW]	Dimensions [mm]																		
			A1	A2	A3	A4	B1	B2	B3	H	H1	H2	L1	L2	L3	L4	L5	L6	L7	L8	L9
CM1-2	71	0.46	1"	1"	3/8"	10.5	141	158	125	184	75	165	306	132	108	72	96	137	60	174	234
CM1-3	71	0.46	1"	1"	3/8"	10.5	141	158	125	184	75	165	306	132	108	72	96	137	60	174	234
CM1-4	71	0.46	1"	1"	3/8"	10.5	141	158	125	184	75	165	324	150	126	90	96	137	60	174	234
CM1-5	71	0.46	1"	1"	3/8"	10.5	141	158	125	184	75	165	342	168	144	108	96	137	60	174	234
CM1-6	71	0.46	1"	1"	3/8"	10.5	141	158	125	184	75	165	378	204	180	144	96	137	60	174	234
CM1-7	71	0.65	1"	1"	3/8"	10.5	141	158	125	184	75	165	378	204	180	144	96	137	60	174	234
CM1-8	71	0.65	1"	1"	3/8"	10.5	141	158	125	184	75	165	414	240	216	180	96	137	60	174	234
CM1-9	71	0.65	1"	1"	3/8"	10.5	141	158	125	184	75	165	414	240	216	180	96	137	60	174	234
CM1-10	80	1.10	1"	1"	3/8"	10.5	141	158	125	184	75	165	510	276	252	216	96	137	60	234	294
CM1-11	80	1.10	1"	1"	3/8"	10.5	141	158	125	184	75	165	510	276	252	216	96	137	60	234	294
CM1-12	80	1.10	1"	1"	3/8"	10.5	141	158	125	184	75	165	564	330	306	270	96	137	60	234	294
CM1-13	80	1.10	1"	1"	3/8"	10.5	141	158	125	184	75	165	564	330	306	270	96	137	60	234	294
CM1-14	80	1.10	1"	1"	3/8"	10.5	141	158	125	184	75	165	564	330	306	270	96	137	60	234	294

1 x 220-240 V, 50 Hz (supply voltage C)

Pump type	Frame size	P_2 [kW]	Dimensions [mm]																		
			A1	A2	A3	A4	B1	B2	B3	H	H1	H2	L1	L2	L3	L4	L5	L6	L7	L8	L9
CM1-2	71	0.30	1"	1"	3/8"	10.5	141	158	125	208	75	165	306	132	108	72	96	137	60	174	234
CM1-3	71	0.30	1"	1"	3/8"	10.5	141	158	125	208	75	165	306	132	108	72	96	137	60	174	234
CM1-4	71	0.50	1"	1"	3/8"	10.5	141	158	125	208	75	165	324	150	126	90	96	137	60	174	234
CM1-5	71	0.50	1"	1"	3/8"	10.5	141	158	125	208	75	165	342	168	144	108	96	137	60	174	234
CM1-6	71	0.50	1"	1"	3/8"	10.5	141	158	125	208	75	165	378	204	180	144	96	137	60	174	234
CM1-7	71	0.50	1"	1"	3/8"	10.5	141	158	125	208	75	165	378	204	180	144	96	137	60	174	234
CM1-8	80	0.67	1"	1"	3/8"	10.5	141	158	125	208	75	165	454	240	216	180	96	137	60	214	274
CM1-9	80	0.67	1"	1"	3/8"	10.5	141	158	125	208	75	165	454	240	216	180	96	137	60	214	274
CM1-10	80	0.67	1"	1"	3/8"	10.5	141	158	125	208	75	165	490	276	252	216	96	137	60	214	274
CM1-11	80	0.90	1"	1"	3/8"	10.5	141	158	125	208	75	165	490	276	252	216	96	137	60	214	274
CM1-12	80	0.90	1"	1"	3/8"	10.5	141	158	125	208	75	165	544	330	306	270	96	137	60	214	274
CM1-13	80	0.90	1"	1"	3/8"	10.5	141	158	125	208	75	165	544	330	306	270	96	137	60	214	274
CM1-14	90	1.30	1"	1"	3/8"	10.0	178	178	140	229	90	180	595	371	356	270	125	155	101	224	325

All dimensions are in mm unless otherwise stated.

CM 3-A

(A = cast iron EN-GJL-200)

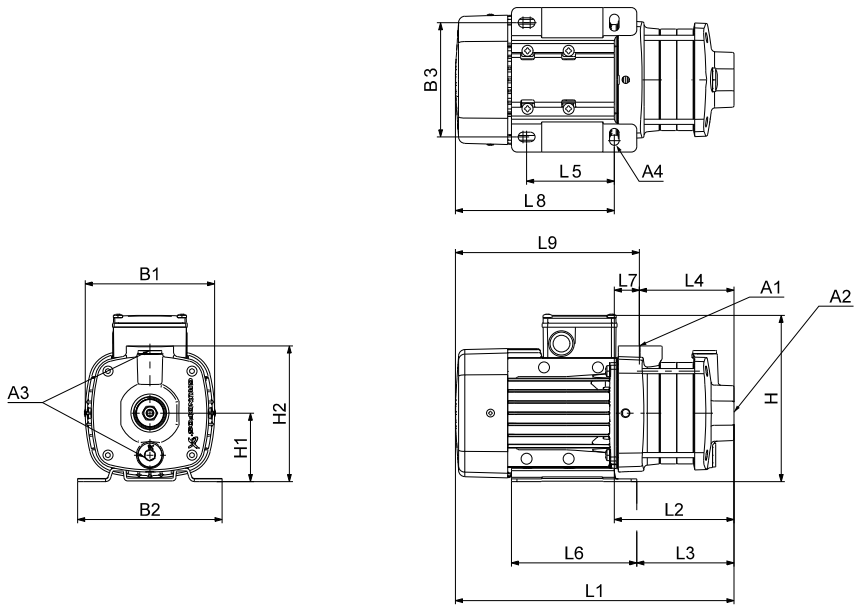

TM06 7509 3616

Dimensions

3 x 220-240/380-415 V, 50 Hz (supply voltage F)

Pump type	Frame size	P_2 [kW]	Dimensions [mm]																		
			A1	A2	A3	A4	B1	B2	B3	H	H1	H2	L1	L2	L3	L4	L5	L6	L7	L8	L9
CM3-2	71	0.46	1"	1"	3/8"	10.5	141	158	125	184	75	149	286	112	88	85	96	137	27	174	201
CM3-3	71	0.46	1"	1"	3/8"	10.5	141	158	125	184	75	149	304	130	106	103	96	137	27	174	201
CM3-4	71	0.46	1"	1"	3/8"	10.5	141	158	125	184	75	149	322	148	124	121	96	137	27	174	201
CM3-5	71	0.65	1"	1"	3/8"	10.5	141	158	125	184	75	149	340	166	142	139	96	137	27	174	201
CM3-6	71	0.65	1"	1"	3/8"	10.5	141	158	125	184	75	149	358	184	160	157	96	137	27	174	201
CM3-7	80	1.10	1"	1"	3/8"	10.5	141	158	125	184	75	149	436	202	178	175	96	137	27	234	261
CM3-8	80	1.10	1"	1"	3/8"	10.5	141	158	125	184	75	149	454	220	196	193	96	137	27	234	261

1 x 220-240 V, 50 Hz (supply voltage C)

Pump type	Frame size	P_2 [kW]	Dimensions [mm]																		
			A1	A2	A3	A4	B1	B2	B3	H	H1	H2	L1	L2	L3	L4	L5	L6	L7	L8	L9
CM3-2	71	0.30	1"	1"	3/8"	10.5	141	158	125	208	75	149	286	112	88	85	96	137	27	174	201
CM3-3	71	0.50	1"	1"	3/8"	10.5	141	158	125	208	75	149	304	130	106	103	96	137	27	174	201
CM3-4	71	0.50	1"	1"	3/8"	10.5	141	158	125	208	75	149	322	148	124	121	96	137	27	174	201
CM3-5	71	0.50	1"	1"	3/8"	10.5	141	158	125	208	75	149	340	166	142	139	96	137	27	174	201
CM3-6	80	0.67	1"	1"	3/8"	10.5	141	158	125	208	75	149	398	184	160	157	96	137	27	214	241
CM3-7	80	0.90	1"	1"	3/8"	10.5	141	158	125	208	75	149	416	202	178	175	96	137	27	214	241
CM3-8	80	0.90	1"	1"	3/8"	10.5	141	158	125	208	75	149	434	220	196	193	96	137	27	214	241

All dimensions are in mm unless otherwise stated.

CM 3-I and CM 3-G

(I = EN 1.4301/AISI 304 and G = EN 1.4401/AISI 316)

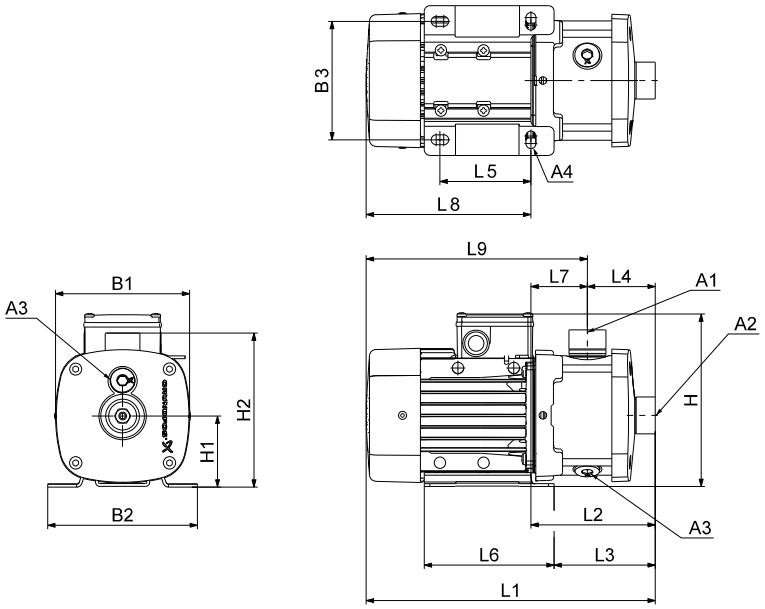

TM06 7507 3616

Dimensions

3 x 220-240/380-415 V, 50 Hz (supply voltage F)

Pump type	Frame size	P_2 [kW]	Dimensions [mm]																		
			A1	A2	A3	A4	B1	B2	B3	H	H1	H2	L1	L2	L3	L4	L5	L6	L7	L8	L9
CM3-2	71	0.46	1"	1"	3/8"	10.5	141	158	125	184	75	165	306	132	108	72	96	137	60	174	234
CM3-3	71	0.46	1"	1"	3/8"	10.5	141	158	125	184	75	165	306	132	108	72	96	137	60	174	234
CM3-4	71	0.46	1"	1"	3/8"	10.5	141	158	125	184	75	165	324	150	126	90	96	137	60	174	234
CM3-5	71	0.65	1"	1"	3/8"	10.5	141	158	125	184	75	165	342	168	144	108	96	137	60	174	234
CM3-6	71	0.65	1"	1"	3/8"	10.5	141	158	125	184	75	165	378	204	180	144	96	137	60	174	234
CM3-7	80	1.10	1"	1"	3/8"	10.5	141	158	125	184	75	165	438	204	180	144	96	137	60	234	294
CM3-8	80	1.10	1"	1"	3/8"	10.5	141	158	125	184	75	165	474	240	216	180	96	137	60	234	294
CM3-9	80	1.10	1"	1"	3/8"	10.5	141	158	125	184	75	165	474	240	216	180	96	137	60	234	294
CM3-10	90	1.50	1"	1"	3/8"	10.0	178	178	140	200	90	180	541	317	302	216	125	155	101	224	325
CM3-11	90	1.50	1"	1"	3/8"	10.0	178	178	140	200	90	180	541	317	302	216	125	155	101	224	325
CM3-12	90	1.50	1"	1"	3/8"	10.0	178	178	140	200	90	180	595	371	356	270	125	155	101	224	325
CM3-13	90	2.20	1"	1"	3/8"	10.0	178	178	140	200	90	180	635	371	356	270	125	155	101	264	365
CM3-14	90	2.20	1"	1"	3/8"	10.0	178	178	140	200	90	180	635	371	356	270	125	155	101	264	365

1 x 220-240 V, 50 Hz (supply voltage C)

Pump type	Frame size	P_2 [kW]	Dimensions [mm]																		
			A1	A2	A3	A4	B1	B2	B3	H	H1	H2	L1	L2	L3	L4	L5	L6	L7	L8	L9
CM3-2	71	0.30	1"	1"	3/8"	10.5	141	158	125	208	75	165	306	132	108	72	96	137	60	174	234
CM3-3	71	0.50	1"	1"	3/8"	10.5	141	158	125	208	75	165	306	132	108	72	96	137	60	174	234
CM3-4	71	0.50	1"	1"	3/8"	10.5	141	158	125	208	75	165	324	150	126	90	96	137	60	174	234
CM3-5	71	0.50	1"	1"	3/8"	10.5	141	158	125	208	75	165	342	168	144	108	96	137	60	174	234
CM3-6	80	0.67	1"	1"	3/8"	10.5	141	158	125	208	75	165	418	204	180	144	96	137	60	214	274
CM3-7	80	0.90	1"	1"	3/8"	10.5	141	158	125	208	75	165	418	204	180	144	96	137	60	214	274
CM3-8	80	0.90	1"	1"	3/8"	10.5	141	158	125	208	75	165	454	240	216	180	96	137	60	214	274
CM3-9	90	1.30	1"	1"	3/8"	10.0	178	178	140	229	90	180	505	281	266	180	125	155	101	224	325
CM3-10	90	1.30	1"	1"	3/8"	10.0	178	178	140	229	90	180	541	317	302	216	125	155	101	224	325
CM3-11	90	1.30	1"	1"	3/8"	10.0	178	178	140	229	90	180	541	317	302	216	125	155	101	224	325
CM3-12	90	1.30	1"	1"	3/8"	10.0	178	178	140	229	90	180	595	371	356	270	125	155	101	224	325
CM3-13	90	1.30	1"	1"	3/8"	10.0	178	178	140	229	90	180	595	371	356	270	125	155	101	224	325
CM3-14	90	1.70	1"	1"	3/8"	10.0	178	178	140	229	90	180	595	371	356	270	125	155	101	224	325

All dimensions are in mm unless otherwise stated.

CM 5-A

(A = cast iron EN-GJL-200)

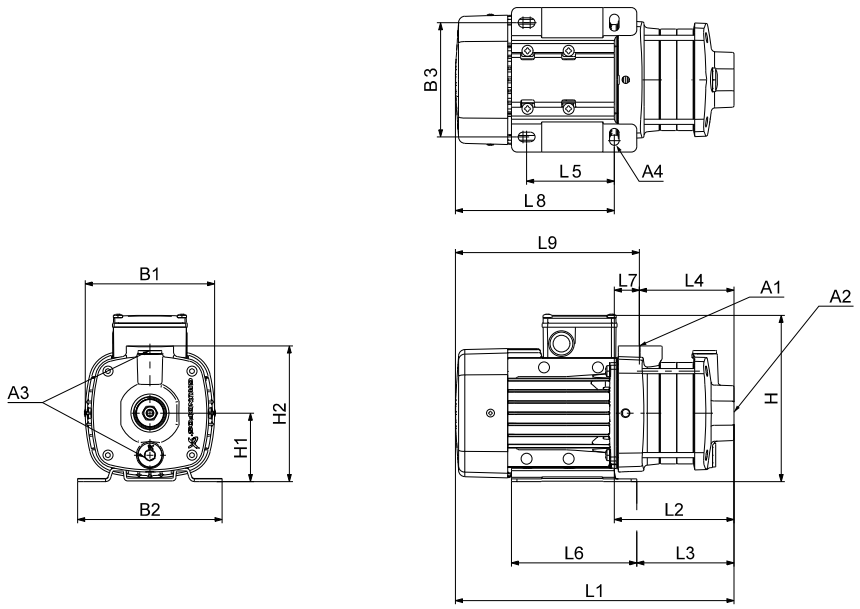

TM06 7509 3616

Dimensions

3 x 220-240/380-415 V, 50 Hz (supply voltage F)

Pump type	Frame size	P_2 [kW]	Dimensions [mm]																		
			A1	A2	A3	A4	B1	B2	B3	H	H1	H2	L1	L2	L3	L4	L5	L6	L7	L8	L9
CM5-2	71	0.46	1"	1 1/4"	3/8"	10.5	141	158	125	184	75	149	286	112	88	85	96	137	27	174	201
CM5-3	71	0.65	1"	1 1/4"	3/8"	10.5	141	158	125	184	75	149	304	130	106	103	96	137	27	174	201
CM5-4	80	1.10	1"	1 1/4"	3/8"	10.5	141	158	125	184	75	149	382	148	124	121	96	137	27	234	261
CM5-5	80	1.10	1"	1 1/4"	3/8"	10.5	141	158	125	184	75	149	400	166	142	139	96	137	27	234	261
CM5-6	90	1.50	1"	1 1/4"	3/8"	10.0	178	178	140	200	90	201	449	225	210	144	125	155	81	224	306
CM5-7	90	1.50	1"	1 1/4"	3/8"	10.0	178	178	140	200	90	201	467	243	228	162	125	155	81	224	306
CM5-8	90	2.20	1"	1 1/4"	3/8"	10.0	178	178	140	200	90	201	525	261	246	180	125	155	81	264	346

1 x 220-240 V, 50 Hz (supply voltage C)

Pump type	Frame size	P_2 [kW]	Dimensions [mm]																		
			A1	A2	A3	A4	B1	B2	B3	H	H1	H2	L1	L2	L3	L4	L5	L6	L7	L8	L9
CM5-2	71	0.50	1"	1 1/4"	3/8"	10.5	141	158	125	208	75	149	286	112	88	85	96	137	27	174	201
CM5-3	71	0.50	1"	1 1/4"	3/8"	10.5	141	158	125	208	75	149	304	130	106	103	96	137	27	174	201
CM5-4	80	0.67	1"	1 1/4"	3/8"	10.5	141	158	125	208	75	149	362	148	124	121	96	137	27	214	241
CM5-5	80	0.90	1"	1 1/4"	3/8"	10.5	141	158	125	208	75	149	380	166	142	139	96	137	27	214	241
CM5-6	90	1.30	1"	1 1/4"	3/8"	10.0	178	178	140	229	90	201	449	225	210	144	125	155	81	224	306
CM5-7	90	1.30	1"	1 1/4"	3/8"	10.0	178	178	140	229	90	201	467	243	228	162	125	155	81	224	306
CM5-8	90	1.70	1"	1 1/4"	3/8"	10.0	178	178	140	229	90	201	485	261	246	180	125	155	81	224	306

All dimensions are in mm unless otherwise stated.

CM 5-I and CM 5-G

(I = EN 1.4301/AISI 304 and G = EN 1.4401/AISI 316)

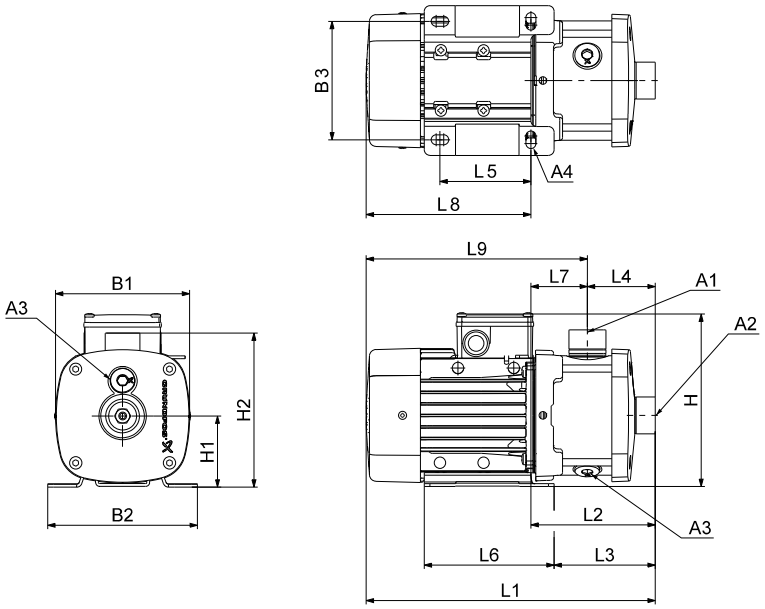

TM06 7507 3616

Dimensions

3 x 220-240/380-415 V, 50 Hz (supply voltage F)

Pump type	Frame size	P_2 [kW]	Dimensions [mm]																		
			A1	A2	A3	A4	B1	B2	B3	H	H1	H2	L1	L2	L3	L4	L5	L6	L7	L8	L9
CM5-2	71	0.46	1"	1 1/4"	3/8"	10.5	141	158	125	184	75	165	306	132	108	72	96	137	60	174	234
CM5-3	71	0.65	1"	1 1/4"	3/8"	10.5	141	158	125	184	75	165	306	132	108	72	96	137	60	174	234
CM5-4	80	1.10	1"	1 1/4"	3/8"	10.5	141	158	125	184	75	165	384	150	126	90	96	137	60	234	294
CM5-5	80	1.10	1"	1 1/4"	3/8"	10.5	141	158	125	184	75	165	402	168	144	108	96	137	60	234	294
CM5-6	90	1.50	1"	1 1/4"	3/8"	10.0	178	178	140	200	90	180	469	245	230	144	125	155	101	224	325
CM5-7	90	1.50	1"	1 1/4"	3/8"	10.0	178	178	140	200	90	180	469	245	230	144	125	155	101	224	325
CM5-8	90	2.20	1"	1 1/4"	3/8"	10.0	178	178	140	200	90	180	545	281	266	180	125	155	101	264	365
CM5-9	90	2.20	1"	1 1/4"	3/8"	10.0	178	178	140	200	90	180	545	281	266	180	125	155	101	264	365
CM5-10	90	2.20	1"	1 1/4"	3/8"	10.0	178	178	140	200	90	180	581	317	302	216	125	155	101	264	365
CM5-11	90	2.20	1"	1 1/4"	3/8"	10.0	178	178	140	200	90	180	581	317	302	216	125	155	101	264	365
CM5-12	100	3.00	1"	1 1/4"	3/8"	12.0	198	199	160	220	100	190	651	378	363	270	140	170	108	273	381
CM5-13	100	3.00	1"	1 1/4"	3/8"	12.0	198	199	160	220	100	190	651	378	363	270	140	170	108	273	381

1 x 220-240 V, 50 Hz (supply voltage C)

Pump type	Frame size	P_2 [kW]	Dimensions [mm]																		
			A1	A2	A3	A4	B1	B2	B3	H	H1	H2	L1	L2	L3	L4	L5	L6	L7	L8	L9
CM5-2	71	0.50	1"	1 1/4"	3/8"	10.5	141	158	125	208	75	165	306	132	108	72	96	137	60	174	234
CM5-3	71	0.50	1"	1 1/4"	3/8"	10.5	141	158	125	208	75	165	306	132	108	72	96	137	60	174	234
CM5-4	80	0.67	1"	1 1/4"	3/8"	10.5	141	158	125	208	75	165	364	150	126	90	96	137	60	214	274
CM5-5	80	0.90	1"	1 1/4"	3/8"	10.5	141	158	125	208	75	165	382	168	144	108	96	137	60	214	274
CM5-6	90	1.30	1"	1 1/4"	3/8"	10.0	178	178	140	229	90	180	469	245	230	144	125	155	101	224	325
CM5-7	90	1.30	1"	1 1/4"	3/8"	10.0	178	178	140	229	90	180	469	245	230	144	125	155	101	224	325
CM5-8	90	1.70	1"	1 1/4"	3/8"	10.0	178	178	140	229	90	180	505	281	266	180	125	155	101	224	325
CM5-9	90	1.70	1"	1 1/4"	3/8"	10.0	178	178	140	229	90	180	505	281	266	180	125	155	101	224	325
CM5-10	90	1.70	1"	1 1/4"	3/8"	10.0	178	178	140	229	90	180	541	317	302	216	125	155	101	224	325
CM5-11	90	1.70	1"	1 1/4"	3/8"	10.0	178	178	140	229	90	180	541	317	302	216	125	155	101	224	325

All dimensions are in mm unless otherwise stated.

CM 10-A

(A = cast iron EN-GJL-200)

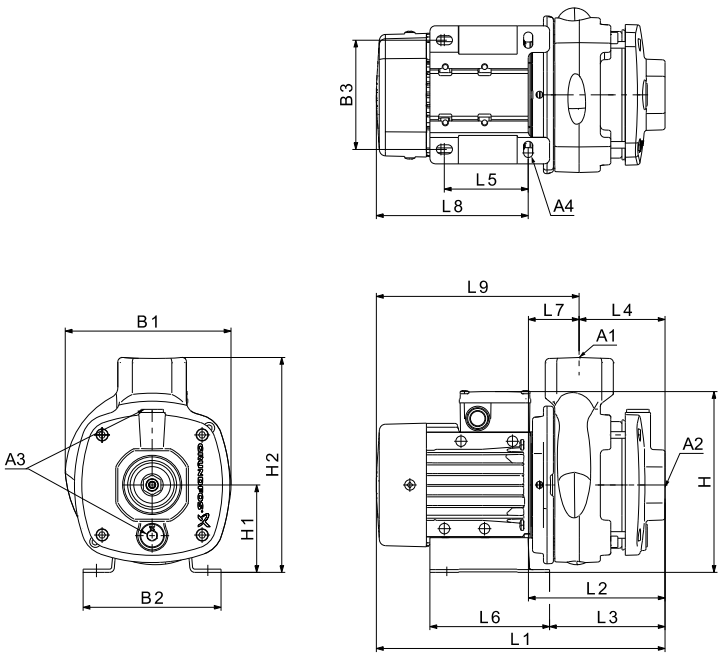

TM06 7512 3616

Dimensions

3 x 220-240/380-415 V, 50 Hz (supply voltage F)

Pump type	Frame size	P_2 [kW]	Dimensions [mm]																		
			A1	A2	A3	A4	B1	B2	B3	H	H1	H2	L1	L2	L3	L4	L5	L6	L7	L8	L9
CM10-1	71	0.65	1 1/2"	1 1/2"	3/8"	10.5	190	158	125	209	100	242	330	156	131	97	95	137	59	174	232
CM10-2	90	1.50	1 1/2"	1 1/2"	3/8"	12.0	190	199	160	210	100	242	411	179	164	97	140	170	82	232	314
CM10-3	90	2.20	1 1/2"	1 1/2"	3/8"	12.0	190	199	160	210	100	242	481	209	194	127	140	170	82	272	354
CM10-4	100	3.0	1 1/2"	1 1/2"	3/8"	12.0	198	199	160	220	100	242	527	254	239	157	140	170	97	273	370
CM10-5	100	3.0	1 1/2"	1 1/2"	3/8"	12.0	198	199	160	220	100	242	557	284	269	187	140	170	97	273	370

1 x 220-240 V, 50 Hz (supply voltage C)

Pump type	Frame size	P_2 [kW]	Dimensions [mm]																		
			A1	A2	A3	A4	B1	B2	B3	H	H1	H2	L1	L2	L3	L4	L5	L6	L7	L8	L9
CM10-1	80	0.67	1 1/2"	1 1/2"	3/8"	10.5	190	158	125	233	100	242	370	156	131	97	95	137	59	214	272
CM10-2	90	1.30	1 1/2"	1 1/2"	3/8"	12.0	190	199	160	239	100	242	411	179	164	97	140	170	82	232	314
CM10-3	90	1.70	1 1/2"	1 1/2"	3/8"	12.0	190	199	160	239	100	242	441	209	194	127	140	170	82	232	314

All dimensions are in mm unless otherwise stated.

CM 10-I and CM 10-G

(I = EN 1.4301/AISI 304 and G = EN 1.4401/AISI 316)

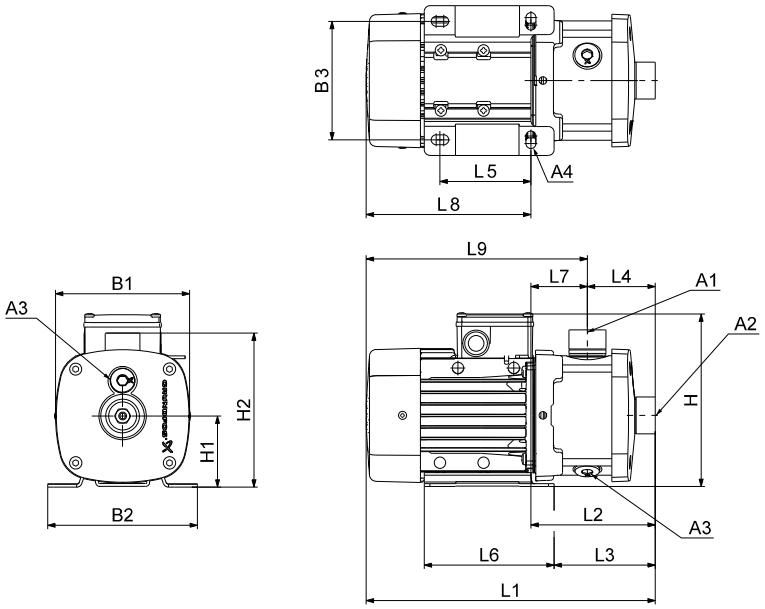

TM06 7507 3616

Dimensions

3 x 220-240/380-415 V, 50 Hz (supply voltage F)

Pump type	Frame size	P_2 [kW]	Dimensions [mm]																		
			A1	A2	A3	A4	B1	B2	B3	H	H1	H2	L1	L2	L3	L4	L5	L6	L7	L8	L9
CM10-1	71	0.65	1 1/2"	1 1/2"	3/8"	10.5	180	158	125	209	100	219	360	186	161	105	95	137	81	174	255
CM10-2	90	1.50	1 1/2"	1 1/2"	3/8"	12.0	178	199	160	210	100	219	451	219	204	105	140	170	114	232	346
CM10-3	90	2.20	1 1/2"	1 1/2"	3/8"	12.0	178	199	160	210	100	219	491	219	204	105	140	170	114	272	386
CM10-4	100	3.00	1 1/2"	1 1/2"	3/8"	12.0	198	199	160	220	100	219	537	264	249	135	140	170	129	273	402
CM10-5	100	3.00	1 1/2"	1 1/2"	3/8"	12.0	198	199	160	220	100	219	597	324	309	195	140	170	129	273	402
CM10-6	112	4.00	1 1/2"	1 1/2"	3/8"	12.0	220	228	190	246	112	231	650	348	332	195	140	172	153	302	455
CM10-7	132	5.50	1 1/2"	1 1/2"	3/8"	12.0	220	228	190	246	112	231	710	408	392	255	140	172	153	302	455
CM10-8	132	5.50	1 1/2"	1 1/2"	3/8"	12.0	220	228	190	246	112	231	710	408	392	255	140	172	153	302	455

Please note that the dimension H is smaller than H2 for CM 10-1, CM 10-2 and CM 10-3.

1 x 220-240 V, 50 Hz (supply voltage C)

Pump type	Frame size	P_2 [kW]	Dimensions [mm]																		
			A1	A2	A3	A4	B1	B2	B3	H	H1	H2	L1	L2	L3	L4	L5	L6	L7	L8	L9
CM10-1	80	0.67	1 1/2"	1 1/2"	3/8"	10.5	141	158	125	233	100	219	400	186	161	105	95	137	81	214	295
CM10-2	90	1.30	1 1/2"	1 1/2"	3/8"	12.0	178	199	160	239	100	219	451	219	204	105	140	170	114	232	346
CM10-3	90	1.70	1 1/2"	1 1/2"	3/8"	12.0	178	199	160	239	100	219	451	219	204	105	140	170	114	232	346

All dimensions are in mm unless otherwise stated.

CM 15-A

(A = cast iron EN-GJL-200)

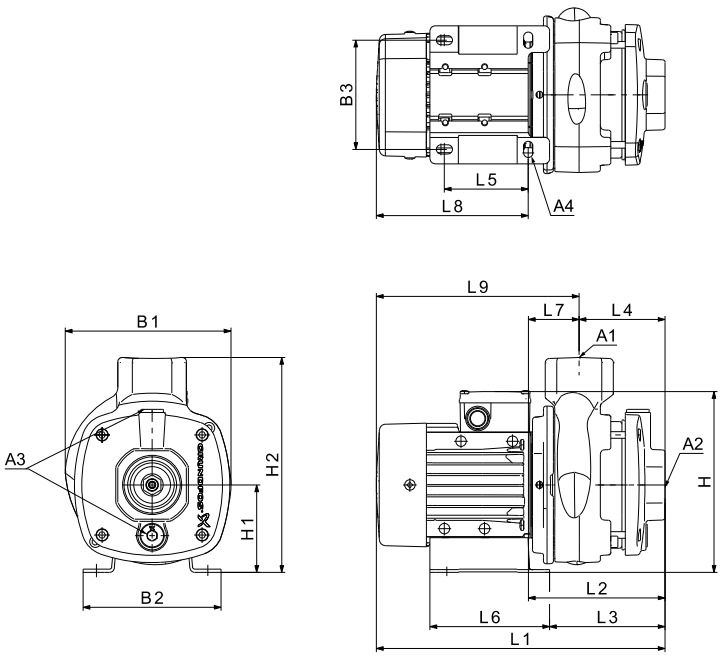

TM06 7512 3616

Dimensions

3 x 220-240/380-415 V, 50 Hz (supply voltage F)

Pump type	Frame size	P_2 [kW]	Dimensions [mm]																		
			A1	A2	A3	A4	B1	B2	B3	H	H1	H2	L1	L2	L3	L4	L5	L6	L7	L8	L9
CM15-1	80	1.1	2"	2"	3/8"	10.5	190	158	125	209	100	242	390	156	131	97	95	137	59	234	292
CM15-2	90	2.2	2"	2"	3/8"	12.0	190	199	160	210	100	242	451	179	164	97	140	170	82	272	354
CM15-3	112	4.0	2"	2"	3/8"	12.0	220	228	190	246	112	254	550	248	232	127	140	172	120	302	423
CM15-4	132	5.5	2"	2"	3/8"	12.0	220	228	190	246	112	254	580	278	262	157	140	172	120	302	423

1 x 220-240 V, 50 Hz (supply voltage C)

Pump type	Frame size	P_2 [kW]	Dimensions [mm]																		
			A1	A2	A3	A4	B1	B2	B3	H	H1	H2	L1	L2	L3	L4	L5	L6	L7	L8	L9
CM15-1	90	1.30	2"	2"	3/8"	12.0	190	199	160	239	100	242	411	179	164	97	140	170	82	232	314
CM15-2	90	1.70	2"	2"	3/8"	12.0	190	199	160	239	100	242	411	179	164	97	140	170	82	232	314

All dimensions are in mm unless otherwise stated.

CM 15-I and CM 15-G

(I = EN 1.4301/AISI 304 and G = EN 1.4401/AISI 316)

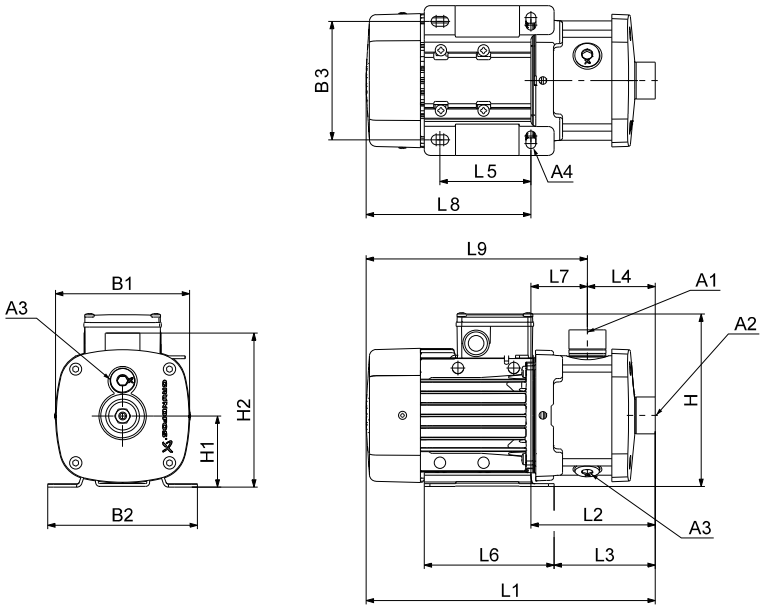

TM06 7507 3616

Dimensions

3 x 220-240/380-415 V, 50 Hz (supply voltage F)

Pump type	Frame size	P_2 [kW]	Dimensions [mm]																		
			A1	A2	A3	A4	B1	B2	B3	H	H1	H2	L1	L2	L3	L4	L5	L6	L7	L8	L9
CM15-1	80	1.10	2"	2"	3/8"	10.5	141	158	125	209	100	217	420	186	161	105	95	137	81	234	315
CM15-2	90	2.20	2"	2"	3/8"	12.0	178	199	160	210	100	217	491	219	204	105	140	170	114	272	386
CM15-3	112	4.00	2"	2"	3/8"	12.0	220	228	190	246	112	229	560	258	242	105	140	172	153	302	455
CM15-4	132	5.50	2"	2"	3/8"	12.0	220	228	190	246	112	229	590	288	272	135	140	172	153	302	455

Please note that the dimension H is smaller than H2 for CM 15-1 and CM 15-2.

1 x 220-240 V, 50 Hz (supply voltage C)

Pump type	Frame size	P_2 [kW]	Dimensions [mm]																		
			A1	A2	A3	A4	B1	B2	B3	H	H1	H2	L1	L2	L3	L4	L5	L6	L7	L8	L9
CM15-1	90SA	1.3	2"	2"	3/8"	12.0	178	199	160	239	100	217	451	219	204	105	140	170	114	232	346
CM15-2	90SB	1.7	2"	2"	3/8"	12.0	178	199	160	239	100	217	451	219	204	105	140	170	114	232	346

All dimensions are in mm unless otherwise stated.

CM 25-A

(A = cast iron EN-GJL-200)

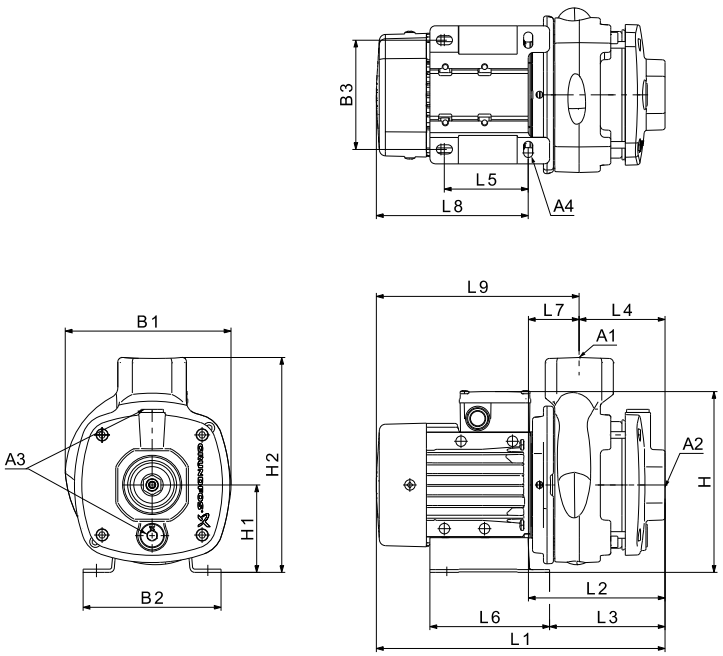

TM06 7512 3616

Dimensions

3 x 220-240/380-415 V, 50 Hz (supply voltage F)

Pump type	Frame size	P_2 [kW]	Dimensions [mm]																		
			A1	A2	A3	A4	B1	B2	B3	H	H1	H2	L1	L2	L3	L4	L5	L6	L7	L8	L9
CM25-1	90	2.20	2"	2"	3/8"	12.0	190	199	160	210	100	242	451	179	164	97	140	170	82	272	354
CM25-2	112	4.0	2"	2"	3/8"	12.0	220	228	190	246	112	254	520	218	202	97	140	172	120	302	423
CM25-3	132	5.50	2"	2"	3/8"	12.0	220	228	190	246	112	254	550	248	232	127	140	172	120	302	423
CM25-4	132	7.50	2"	2"	3/8"	12.0	263	244	216	291	132	273	559	269	257	157	140	164	112	290	402

1 x 220-240 V, 50 Hz (supply voltage C)

Pump type	Frame size	P_2 [kW]	Dimensions [mm]																		
			A1	A2	A3	A4	B1	B2	B3	H	H1	H2	L1	L2	L3	L4	L5	L6	L7	L8	L9
CM25-1	90	1.70	2"	2"	3/8"	12.0	190	199	160	239	100	242	411	179	164	97	140	170	82	232	314

All dimensions are in mm unless otherwise stated.

CM 25-I and CM 25-G

(I = EN 1.4301/AISI 304 and G = EN 1.4401/AISI 316)

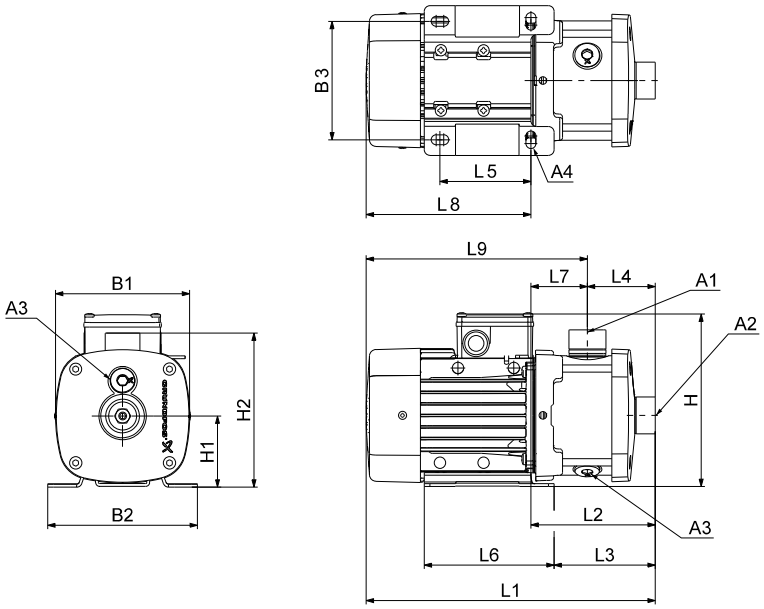

TM06 7507 3616

Dimensions

3 x 220-240/380-415 V, 50 Hz (supply voltage F)

Pump type	Frame size	P_2 [kW]	Dimensions [mm]																		
			A1	A2	A3	A4	B1	B2	B3	H	H1	H2	L1	L2	L3	L4	L5	L6	L7	L8	L9
CM25-1	90	2.20	2"	2"	3/8"	12.0	178	199	160	210	100	217	491	219	204	105	140	170	114	272	386
CM25-2	112	4.00	2"	2"	3/8"	12.0	220	228	190	246	112	229	560	258	242	105	140	172	153	302	455
CM25-3	132	5.50	2"	2"	3/8"	12.0	220	228	190	246	112	229	560	258	242	105	140	172	153	302	455
CM25-4	132	7.50	2"	2"	3/8"	12.0	263	244	216	291	132	248	569	279	267	135	140	164	144	290	434

Please note that the dimension H is smaller than H2 for CM 25-1.

1 x 220-240 V, 50 Hz (supply voltage C)

Pump type	Frame size	P_2 [kW]	Dimensions [mm]																		
			A1	A2	A3	A4	B1	B2	B3	H	H1	H2	L1	L2	L3	L4	L5	L6	L7	L8	L9
CM25-1	90	1.70	2"	2"	3/8"	12.0	178	199	160	239	100	217	451	219	204	105	140	170	114	232	346

All dimensions are in mm unless otherwise stated.

23. Dimensions, CM 60 Hz and 50/60 Hz

CM 1-A

(A = cast iron EN-GJL-200)

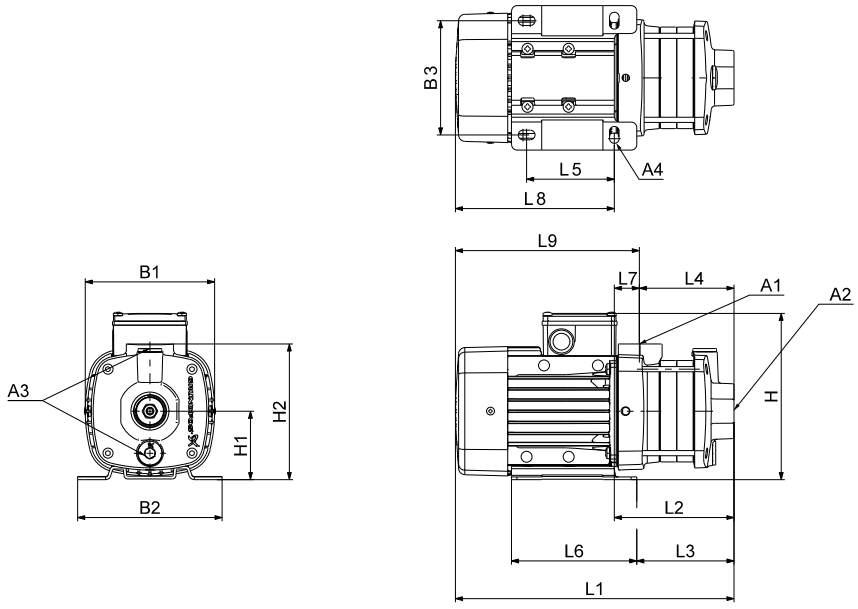

TM06 7509 3616

Dimensions

3 x 208-230/440-480 V, 60 Hz (supply voltage E)
3 x 380-415 V, 50 Hz; 3 x 440-480 V, 60 Hz (supply voltage J)
3 x 220-240/380-415 V, 50 Hz; 3 x 220-255/380-440 V, 60 Hz (supply voltage O)

Pump type	Frame size	P_2 [kW]		Dimensions [mm]																		
		50 Hz	60 Hz	A1	A2	A3	A4	B1	B2	B3	H	H1	H2	L1	L2	L3	L4	L5	L6	L7	L8	L9
CM1-2	71	0.25/0.43*	0.43/0.74*	1"	1"	3/8"	10.5	141	158	125	184	75	149	286	112	88	85	96	137	27	174	201
CM1-3	71	0.25/0.43*	0.43/0.74*	1"	1"	3/8"	10.5	141	158	125	184	75	149	304	130	106	103	96	137	27	174	201
CM1-4	71	0.43	0.74	1"	1"	3/8"	10.5	141	158	125	184	75	149	322	148	124	121	96	137	27	174	201
CM1-5	71	0.43	0.74	1"	1"	3/8"	10.5	141	158	125	184	75	149	340	166	142	139	96	137	27	174	201

* Applies to supply voltage O.

3 x 575 V, 60 Hz (supply voltage H)

Pump type	Frame size	P_2 [kW]	Dimensions [mm]																		
			A1	A2	A3	A4	B1	B2	B3	H	H1	H2	L1	L2	L3	L4	L5	L6	L7	L8	L9
CM1-4	80	1.10	1"	1"	3/8"	10.5	141	158	125	192	75	149	382	148	124	121	96	137	27	234	261
CM1-5	80	1.10	1"	1"	3/8"	10.5	141	158	125	192	75	149	400	166	142	139	96	137	27	234	261

1 x 115/230 V, 60 Hz (supply voltage B, B1)
1 x 230 V, 60 Hz (supply voltage B2)
1 x 220 V, 60 Hz (supply voltage A)

Pump type	Frame size	P_2 [kW]	Dimensions [mm]																		
			A1	A2	A3	A4	B1	B2	B3	H	H1	H2	L1	L2	L3	L4	L5	L6	L7	L8	L9
CM1-2	71	0.60	1"	1"	3/8"	10.5	141	158	125	208	75	149	286	112	88	85	96	137	27	174	201
CM1-3	71	0.60	1"	1"	3/8"	10.5	141	158	125	208	75	149	304	130	106	103	96	137	27	174	201
CM1-4	71	0.60	1"	1"	3/8"	10.5	141	158	125	208	75	149	322	148	124	121	96	137	27	174	201
CM1-5	71	0.60	1"	1"	3/8"	10.5	141	158	125	208	75	149	340	166	142	139	96	137	27	174	201

3 x 200/346 V, 50 Hz; 3 x 200-220/346-380 V, 60 Hz (supply voltage G)

Pump type	Frame size	P_2 [kW]		Dimensions [mm]																		
		50 Hz	60 Hz	A1	A2	A3	A4	B1	B2	B3	H	H1	H2	L1	L2	L3	L4	L5	L6	L7	L8	L9
CM1-2	71	0.25	0.43	1"	1"	3/8"	10.5	141	158	125	184	75	149	286	112	88	85	96	137	27	174	201
CM1-3	71	0.25	0.43	1"	1"	3/8"	10.5	141	158	125	184	75	149	304	130	106	103	96	137	27	174	201
CM1-4	71	0.43	0.74	1"	1"	3/8"	10.5	141	158	125	184	75	149	322	148	124	121	96	137	27	174	201
CM1-5	71	0.43	0.74	1"	1"	3/8"	10.5	141	158	125	184	75	149	340	166	142	139	96	137	27	174	201

All dimensions are in mm unless otherwise stated.

CM 1-I and CM 1-G

(I = EN 1.4301/AISI 304 and G = EN 1.4401/AISI 316)

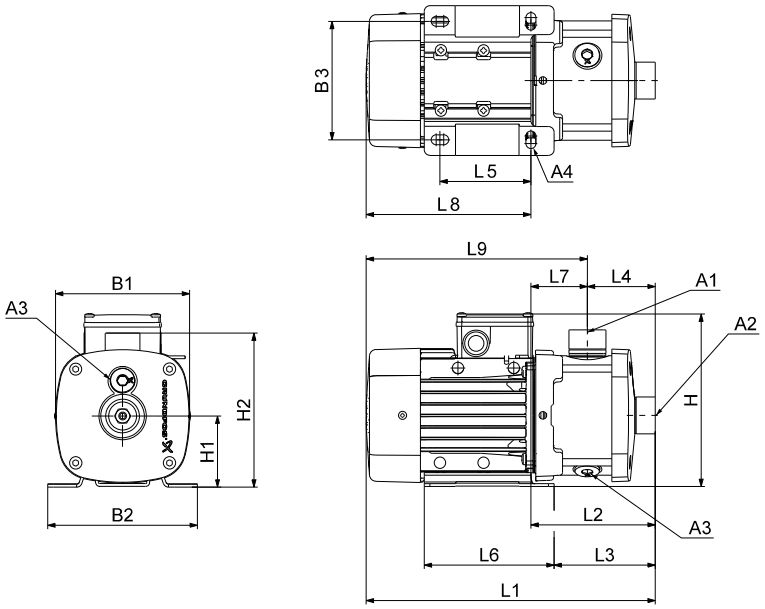

TM06 7507 3616

Dimensions

3 x 208-230/440-480 V, 60 Hz (supply voltage E)
3 x 380-415 V, 50 Hz; 3 x 440-480 V, 60 Hz (supply voltage J)
3 x 220-240/380-415 V, 50 Hz; 3 x 220-255/380-440 V, 60 Hz (supply voltage O)

Pump type	Frame size	P_2 [kW]		Dimensions [mm]																		
		50 Hz	60 Hz	A1	A2	A3	A4	B1	B2	B3	H	H1	H2	L1	L2	L3	L4	L5	L6	L7	L8	L9
CM1-2	71	0.25/0.43*	0.43/0.74*	1"	1"	3/8"	10.5	141	158	125	184	75	165	306	132	108	72	96	137	60	174	234
CM1-3	71	0.25/0.43*	0.43/0.74*	1"	1"	3/8"	10.5	141	158	125	184	75	165	306	132	108	72	96	137	60	174	234
CM1-4	71	0.43	0.74	1"	1"	3/8"	10.5	141	158	125	184	75	165	324	150	126	90	96	137	60	174	234
CM1-5	71	0.43	0.74	1"	1"	3/8"	10.5	141	158	125	184	75	165	342	168	144	108	96	137	60	174	234
CM1-6	71	0.43	0.74	1"	1"	3/8"	10.5	141	158	125	184	75	165	378	204	180	144	96	137	60	174	234
CM1-7	71	0.43	0.74	1"	1"	3/8"	10.5	141	158	125	184	75	165	378	204	180	144	96	137	60	174	234
CM1-8	80	0.64	1.10	1"	1"	3/8"	10.5	141	158	125	184	75	165	474	240	216	180	96	137	60	234	294
CM1-9	80	0.64	1.10	1"	1"	3/8"	10.5	141	158	125	184	75	165	474	240	216	180	96	137	60	234	294

* Applies to supply voltage O.

3 x 575 V, 60 Hz (supply voltage H)

Pump type	Frame size	P_2 [kW]	Dimensions [mm]																		
			A1	A2	A3	A4	B1	B2	B3	H	H1	H2	L1	L2	L3	L4	L5	L6	L7	L8	L9
CM1-4	80	1.10	1"	1"	3/8"	10.5	141	158	125	192	75	165	384	150	126	90	96	137	60	234	294
CM1-5	80	1.10	1"	1"	3/8"	10.5	141	158	125	192	75	165	402	168	144	108	96	137	60	234	294
CM1-6	80	1.10	1"	1"	3/8"	10.5	141	158	125	192	75	165	438	204	180	144	96	137	60	234	294
CM1-7	80	1.10	1"	1"	3/8"	10.5	141	158	125	192	75	165	438	204	180	144	96	137	60	234	294
CM1-8	80	1.10	1"	1"	3/8"	10.5	141	158	125	192	75	165	474	240	216	180	96	137	60	234	294
CM1-9	90	1.50	1"	1"	3/8"	10.0	178	178	140	200	90	180	505	281	266	180	125	155	101	224	325

1 x 115/230 V, 60 Hz (supply voltage B, B1)
1 x 230 V, 60 Hz (supply voltage B2)
1 x 220 V, 60 Hz (supply voltage A)

Pump type	Frame size	P_2 [kW]	Dimensions [mm]																		
			A1	A2	A3	A4	B1	B2	B3	H	H1	H2	L1	L2	L3	L4	L5	L6	L7	L8	L9
CM1-2	71	0.60	1"	1"	3/8"	10.5	141	158	125	208	75	165	306	132	108	72	96	137	60	174	234
CM1-3	71	0.60	1"	1"	3/8"	10.5	141	158	125	208	75	165	306	132	108	72	96	137	60	174	234
CM1-4	71	0.60	1"	1"	3/8"	10.5	141	158	125	208	75	165	324	150	126	90	96	137	60	174	234
CM1-5	71	0.60	1"	1"	3/8"	10.5	141	158	125	208	75	165	342	168	144	108	96	137	60	174	234
CM1-6	80	0.84*/0.78	1"	1"	3/8"	10.5	141	158	125	208	75	165	418	204	180	144	96	137	60	214	274
CM1-7	80	1.14*/1.10	1"	1"	3/8"	10.5	206	158	125	208	75	165	418	204	180	144	96	137	60	214	274
CM1-8	80	1.14*/1.10	1"	1"	3/8"	10.5	206	158	125	208	75	165	454	240	216	180	96	137	60	214	274
CM1-9	80	1.14*/1.10	1"	1"	3/8"	10.5	206	158	125	208	75	165	454	240	216	180	96	137	60	214	274

* Applies to supply voltage A.

3 x 200/346 V, 50 Hz; 3 x 200-220/346-380 V, 60 Hz (supply voltage G)

Pump type	Frame size	P_2 [kW]		Dimensions [mm]																		
		50 Hz	60 Hz	A1	A2	A3	A4	B1	B2	B3	H	H1	H2	L1	L2	L3	L4	L5	L6	L7	L8	L9
CM1-2	71	0.25	0.43	1"	1"	3/8"	10.5	141	158	125	184	75	165	306	132	108	72	96	137	60	174	234
CM1-3	71	0.25	0.43	1"	1"	3/8"	10.5	141	158	125	184	75	165	306	132	108	72	96	137	60	174	234
CM1-4	71	0.43	0.74	1"	1"	3/8"	10.5	141	158	125	184	75	165	324	150	126	90	96	137	60	174	234
CM1-5	71	0.43	0.74	1"	1"	3/8"	10.5	141	158	125	184	75	165	342	168	144	108	96	137	60	174	234
CM1-6	71	0.43	0.74	1"	1"	3/8"	10.5	141	158	125	184	75	165	378	204	180	144	96	137	60	174	234
CM1-7	71	0.43	0.74	1"	1"	3/8"	10.5	141	158	125	184	75	165	378	204	180	144	96	137	60	174	234
CM1-8	80	0.74	1.28	1"	1"	3/8"	10.5	141	158	125	184	75	165	474	240	216	180	96	137	60	234	294
CM1-9	80	0.74	1.28	1"	1"	3/8"	10.5	141	158	125	184	75	165	474	240	216	180	96	137	60	234	294

All dimensions are in mm unless otherwise stated.

CM 3-A

(A = cast iron EN-GJL-200)

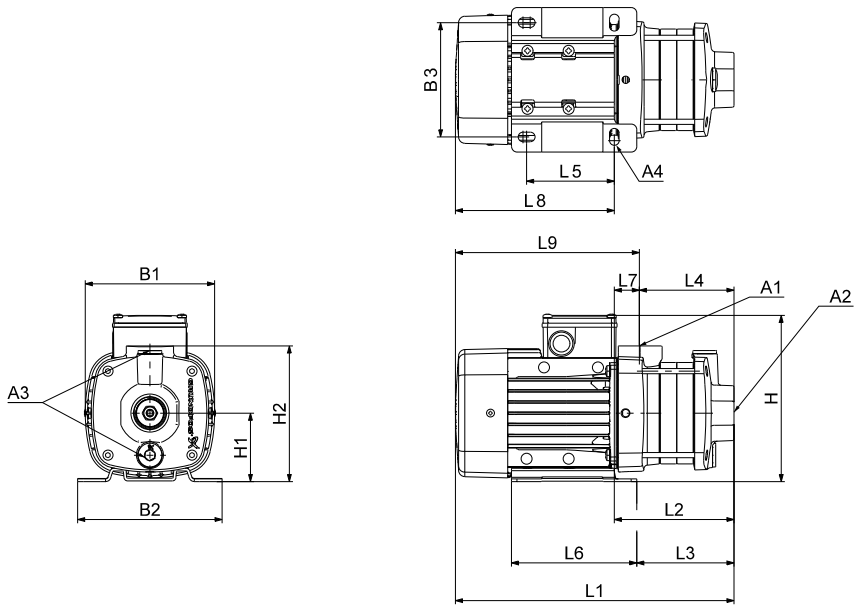

TM06 7509 3616

Dimensions

3 x 208-230/440-480 V, 60 Hz (supply voltage E)
3 x 380-415 V, 50 Hz; 3 x 440-480 V, 60 Hz (supply voltage J)
3 x 220-240/380-415 V, 50 Hz; 3 x 220-255/380-440 V, 60 Hz (supply voltage O)

Pump type	Frame size	P_2 [kW]		Dimensions [mm]																		
		50 Hz	60 Hz	A1	A2	A3	A4	B1	B2	B3	H	H1	H2	L1	L2	L3	L4	L5	L6	L7	L8	L9
CM3-2	71	0.25/0.43*	0.43/0.74*	1"	1"	3/8"	10.5	141	158	125	184	75	149	286	112	88	85	96	137	27	174	201
CM3-3	71	0.43	0.74	1"	1"	3/8"	10.5	141	158	125	184	75	149	304	130	106	103	96	137	27	174	201
CM3-4	71	0.43	0.74	1"	1"	3/8"	10.5	141	158	125	184	75	149	322	148	124	121	96	137	27	174	201
CM3-5	80	0.64	1.10	1"	1"	3/8"	10.5	141	158	125	184	75	149	400	166	142	139	96	137	27	234	261

* Applies to supply voltage O.

3 x 575 V, 60 Hz (supply voltage H)

Pump type	Frame size	P_2 [kW]	Dimensions [mm]																		
			A1	A2	A3	A4	B1	B2	B3	H	H1	H2	L1	L2	L3	L4	L5	L6	L7	L8	L9
CM3-3	80	1.10	1"	1"	3/8"	10.5	141	158	125	192	75	149	364	130	106	103	96	137	27	234	261
CM3-4	80	1.10	1"	1"	3/8"	10.5	141	158	125	192	75	149	382	148	124	121	96	137	27	234	261
CM3-5	80	1.10	1"	1"	3/8"	10.5	141	158	125	192	75	149	400	166	142	139	96	137	27	234	261

1 x 115/230 V, 60 Hz (supply voltage B, B1)
1 x 230 V, 60 Hz (supply voltage B2)
1 x 220 V, 60 Hz (supply voltage A)

Pump type	Frame size	P_2 [kW]	Dimensions [mm]																		
			A1	A2	A3	A4	B1	B2	B3	H	H1	H2	L1	L2	L3	L4	L5	L6	L7	L8	L9
CM3-2	71	0.60	1"	1"	3/8"	10.5	141	158	125	208	75	149	286	112	88	85	96	137	27	174	201
CM3-3	71	0.60	1"	1"	3/8"	10.5	141	158	125	208	75	149	304	130	106	103	96	137	27	174	201
CM3-4	80	0.84*/0.78	1"	1"	3/8"	10.5	141	158	125	208	75	149	362	148	124	121	96	137	27	214	241
CM3-5	80	1.14*/1.10	1"	1"	3/8"	10.5	206	158	125	208	75	149	380	166	142	139	96	137	27	214	241

* Applies to supply voltage A.

3 x 200/346 V, 50 Hz; 3 x 200-220/346-380 V, 60 Hz (supply voltage G)

Pump type	Frame size	P_2 [kW]		Dimensions [mm]																		
		50 Hz	60 Hz	A1	A2	A3	A4	B1	B2	B3	H	H1	H2	L1	L2	L3	L4	L5	L6	L7	L8	L9
CM3-2	71	0.25	0.43	1"	1"	3/8"	10.5	141	158	125	184	75	149	286	112	88	85	96	137	27	174	201
CM3-3	71	0.43	0.74	1"	1"	3/8"	10.5	141	158	125	184	75	149	304	130	106	103	96	137	27	174	201
CM3-4	71	0.43	0.74	1"	1"	3/8"	10.5	141	158	125	184	75	149	322	148	124	121	96	137	27	174	201
CM3-5	80	0.74	1.28	1"	1"	3/8"	10.5	141	158	125	184	75	149	400	166	142	139	96	137	27	234	261

All dimensions are in mm unless otherwise stated.

CM 3-I and CM 3-G

(I = EN 1.4301/AISI 304 and G = EN 1.4401/AISI 316)

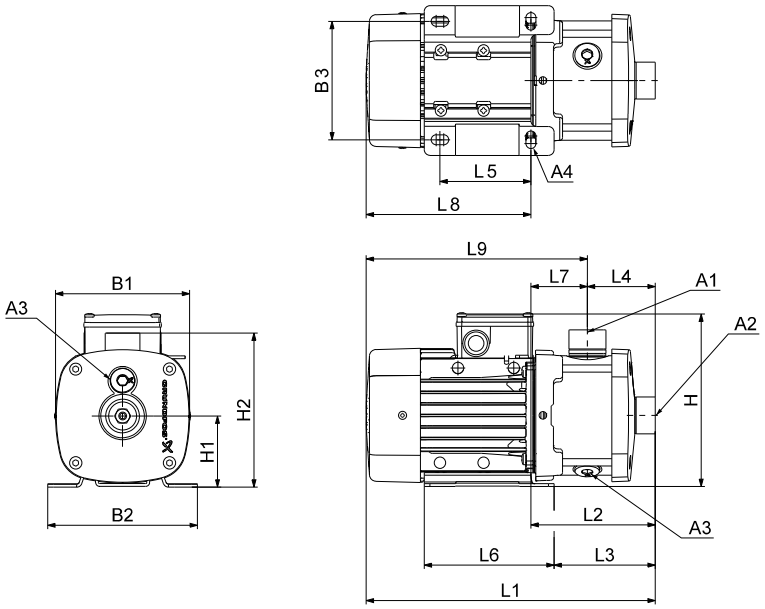

TM06 7507 3616

Dimensions

3 x 208-230/440-480 V, 60 Hz (supply voltage E)
3 x 380-415 V, 50 Hz; 3 x 440-480 V, 60 Hz (supply voltage J)
3 x 220-240/380-415 V, 50 Hz; 3 x 220-255/380-440 V, 60 Hz (supply voltage O)

Pump type	Frame size	P_2 [kW]		Dimensions [mm]																		
		50 Hz	60 Hz	A1	A2	A3	A4	B1	B2	B3	H	H1	H2	L1	L2	L3	L4	L5	L6	L7	L8	L9
CM3-2	71	0.25/0.43*	0.43/0.74*	1"	1"	3/8"	10.5	141	158	125	184	75	165	306	132	108	72	96	137	60	174	234
CM3-3	71	0.43	0.74	1"	1"	3/8"	10.5	141	158	125	184	75	165	306	132	108	72	96	137	60	174	234
CM3-4	71	0.43	0.74	1"	1"	3/8"	10.5	141	158	125	184	75	165	324	150	126	90	96	137	60	174	234
CM3-5	80	0.64	1.10	1"	1"	3/8"	10.5	141	158	125	184	75	165	402	168	144	108	96	137	60	234	294
CM3-6	90	1.27	2.20	1"	1"	3/8"	10	178	178	140	200	90	180	509	245	230	144	125	155	101	264	365
CM3-7	90	1.27	2.20	1"	1"	3/8"	10	178	178	140	200	90	180	509	245	230	144	125	155	101	264	365
CM3-8	90	1.27	2.20	1"	1"	3/8"	10	178	178	140	200	90	180	545	281	266	180	125	155	101	264	365
CM3-9	90	1.27	2.20	1"	1"	3/8"	10	178	178	140	200	90	180	545	281	266	180	125	155	101	264	365

* Applies to supply voltage O.

3 x 575 V, 60 Hz (supply voltage H)

Pump type	Frame size	P_2 [kW]	Dimensions [mm]																		
			A1	A2	A3	A4	B1	B2	B3	H	H1	H2	L1	L2	L3	L4	L5	L6	L7	L8	L9
CM3-3	80	1.10	1"	1"	3/8"	10.5	141	158	125	192	75	165	366	132	108	72	96	137	60	234	294
CM3-4	80	1.10	1"	1"	3/8"	10.5	141	158	125	192	75	165	384	150	126	90	96	137	60	234	294
CM3-5	80	1.10	1"	1"	3/8"	10.5	141	158	125	192	75	165	402	168	144	108	96	137	60	234	294
CM3-6	90	1.50	1"	1"	3/8"	10.0	178	178	140	200	90	180	469	245	230	144	125	155	101	224	325
CM3-7	90	2.20	1"	1"	3/8"	10.0	178	178	140	200	90	180	509	245	230	144	125	155	101	264	365
CM3-8	90	2.20	1"	1"	3/8"	10.0	178	178	140	200	90	180	545	281	266	180	125	155	101	264	365
CM3-9	90	2.20	1"	1"	3/8"	10.0	178	178	140	200	90	180	545	281	266	180	125	155	101	264	365

1 x 115/230 V, 60 Hz (supply voltage B, B1)
1 x 230 V, 60 Hz (supply voltage B2)
1 x 220 V, 60 Hz (supply voltage A)

Pump type	Frame size	P_2 [kW]	Dimensions [mm]																		
			A1	A2	A3	A4	B1	B2	B3	H	H1	H2	L1	L2	L3	L4	L5	L6	L7	L8	L9
CM3-2	71	0.60	1"	1"	3/8"	10.5	141	158	125	208	75	165	306	132	108	72	96	137	60	174	234
CM3-3	71	0.60	1"	1"	3/8"	10.5	141	158	125	208	75	165	306	132	108	72	96	137	60	174	234
CM3-4	80	0.84*/0.78	1"	1"	3/8"	10.5	141	158	125	208	75	165	364	150	126	90	96	137	60	214	274
CM3-5	80	1.14*/1.10	1"	1"	3/8"	10.5	206	158	125	208	75	165	382	168	144	108	96	137	60	214	274
CM3-6	90	1.54*/1.50	1"	1"	3/8"	10.0	178	178	140	229	90	180	469	245	230	144	125	155	101	224	325
CM3-7	90	1.54*/1.50	1"	1"	3/8"	10.0	178	178	140	229	90	180	469	245	230	144	125	155	101	224	325
CM3-8	90	1.54*/1.50	1"	1"	3/8"	10.0	178	178	140	229	90	180	505	281	266	180	125	155	101	224	325

* Applies to supply voltage A.

3 x 200/346 V, 50 Hz; 3 x 200-220/346-380 V, 60 Hz (supply voltage G)

Pump type	Frame size	P_2 [kW]		Dimensions [mm]																		
		50 Hz	60 Hz	A1	A2	A3	A4	B1	B2	B3	H	H1	H2	L1	L2	L3	L4	L5	L6	L7	L8	L9
CM3-2	71	0.25	0.43	1"	1"	3/8"	10.5	141	158	125	184	75	165	306	132	108	72	96	137	60	174	234
CM3-3	71	0.43	0.74	1"	1"	3/8"	10.5	141	158	125	184	75	165	306	132	108	72	96	137	60	174	234
CM3-4	71	0.43	0.74	1"	1"	3/8"	10.5	141	158	125	184	75	165	324	150	126	90	96	137	60	174	234
CM3-5	80	0.74	1.28	1"	1"	3/8"	10.5	141	158	125	184	75	165	402	168	144	108	96	137	60	234	294
CM3-6	80	0.74	1.28	1"	1"	3/8"	10.5	141	158	125	184	75	165	438	204	180	144	96	137	60	234	294
CM3-7	90	1.27	2.20	1"	1"	3/8"	10.0	178	178	140	200	90	180	509	245	230	144	125	155	101	264	365
CM3-8	90	1.27	2.20	1"	1"	3/8"	10.0	178	178	140	200	90	180	545	281	266	180	125	155	101	264	365
CM3-9	90	1.27	2.20	1"	1"	3/8"	10.0	178	178	140	200	90	180	545	281	266	180	125	155	101	264	365

All dimensions are in mm unless otherwise stated.

CM 5-A

(A = cast iron EN-GJL-200)

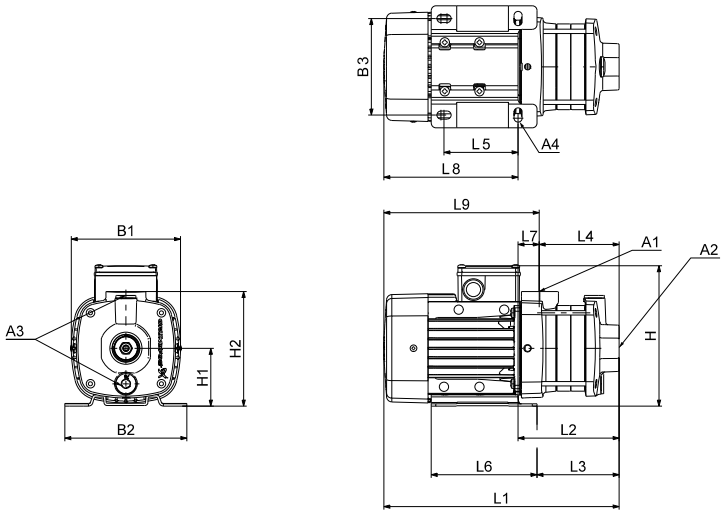

TM06 7509 3616

Dimensions

3 x 208-230/440-480 V, 60 Hz (supply voltage E)
3 x 380-415 V, 50 Hz; 3 x 440-480 V, 60 Hz (supply voltage J)
3 x 220-240/380-415 V, 50 Hz; 3 x 220-255/380-440 V, 60 Hz (supply voltage O)

Pump type	Frame size	P_2 [kW]		Dimensions [mm]																		
		50 Hz	60 Hz	A1	A2	A3	A4	B1	B2	B3	H	H1	H2	L1	L2	L3	L4	L5	L6	L7	L8	L9
CM5-2	71	0.43	0.74	1"	1 1/4"	3/8"	10.5	141	158	125	184	75	149	286	112	88	85	96	137	27	174	201
CM5-3	80	0.64	1.10	1"	1 1/4"	3/8"	10.5	141	158	125	184	75	149	364	130	106	103	96	137	27	234	261
CM5-4	90	1.27	2.20	1"	1 1/4"	3/8"	10.0	178	178	140	200	90	201	453	189	174	108	125	155	81	264	346
CM5-5	90	1.27	2.20	1"	1 1/4"	3/8"	10.0	178	178	140	200	90	201	471	207	192	126	125	155	81	264	346

3 x 575 V, 60 Hz (supply voltage H)

Pump type	Frame size	P_2 [kW]	Dimensions [mm]																		
			A1	A2	A3	A4	B1	B2	B3	H	H1	H2	L1	L2	L3	L4	L5	L6	L7	L8	L9
CM5-2	80	1.10	1"	1 1/4"	3/8"	10.5	141	158	125	192	75	149	346	112	88	85	96	137	27	234	261
CM5-3	80	1.10	1"	1 1/4"	3/8"	10.5	141	158	125	192	75	149	364	130	106	103	96	137	27	234	261
CM5-4	90	1.50	1"	1 1/4"	3/8"	10.0	178	178	140	200	90	201	413	189	174	108	125	155	81	224	306
CM5-5	90	2.20	1"	1 1/4"	3/8"	10.0	178	178	140	200	90	201	471	207	192	126	125	155	81	264	346

1 x 115/230 V, 60 Hz (supply voltage B, B1)
1 x 230 V, 60 Hz (supply voltage B2)
1 x 220 V, 60 Hz (supply voltage A)

Pump type	Frame size	P_2 [kW]	Dimensions [mm]																		
			A1	A2	A3	A4	B1	B2	B3	H	H1	H2	L1	L2	L3	L4	L5	L6	L7	L8	L9
CM5-2	80	0.84*/0.78	1"	1 1/4"	3/8"	10.5	141	158	125	208	75	149	326	112	88	85	96	137	27	214	241
CM5-3	80	1.14*/1.10	1"	1 1/4"	3/8"	10.5	206	158	125	208	75	149	344	130	106	103	96	137	27	214	241
CM5-4	90	1.54*/1.50	1"	1 1/4"	3/8"	10.0	178	178	140	229	90	201	413	189	174	108	125	155	81	224	306

* Applies to supply voltage A.

3 x 200/346 V, 50 Hz; 3 x 200-220/346-380 V, 60 Hz (supply voltage G)

Pump type	Frame size	P_2 [kW]		Dimensions [mm]																		
		50 Hz	60 Hz	A1	A2	A3	A4	B1	B2	B3	H	H1	H2	L1	L2	L3	L4	L5	L6	L7	L8	L9
CM5-2	71	0.43	0.74	1"	1 1/4"	3/8"	10.5	141	158	125	184	75	149	286	112	88	85	96	137	27	174	201
CM5-3	80	0.74	1.28	1"	1 1/4"	3/8"	10.5	141	158	125	184	75	149	364	130	106	103	96	137	27	234	261
CM5-4	90	1.27	2.2	1"	1 1/4"	3/8"	10	178	178	140	200	90	201	453	189	174	108	125	155	81	264	346
CM5-5	90	1.27	2.2	1"	1 1/4"	3/8"	10	178	178	140	200	90	201	471	207	192	126	125	155	81	264	346

All dimensions are in mm unless otherwise stated.

CM 5-I and CM 5-G

(I = EN 1.4301/AISI 304 and G = EN 1.4401/AISI 316)

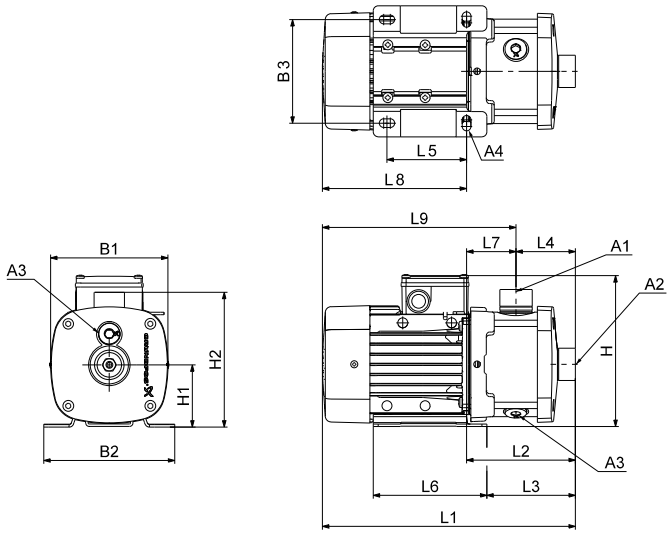

TM06 7507 3616

Dimensions

3 x 208-230/440-480 V, 60 Hz (supply voltage E)
3 x 380-415 V, 50 Hz; 3 x 440-480 V, 60 Hz (supply voltage J)
3 x 220-240/380-415 V, 50 Hz; 3 x 220-255/380-440 V, 60 Hz (supply voltage O)

Pump type	Frame size	P_2 [kW]		Dimensions [mm]																		
		50 Hz	60 Hz	A1	A2	A3	A4	B1	B2	B3	H	H1	H2	L1	L2	L3	L4	L5	L6	L7	L8	L9
CM5-2	71	0.43	0.74	1"	1 1/4"	3/8"	10.5	141	158	125	184	75	165	306	132	108	72	96	137	60	174	234
CM5-3	80	0.64	1.10	1"	1 1/4"	3/8"	10.5	141	158	125	184	75	165	366	132	108	72	96	137	60	234	294
CM5-4	90	1.27	2.20	1"	1 1/4"	3/8"	10.0	178	178	140	200	90	180	455	191	176	90	125	155	101	264	365
CM5-5	90	1.27	2.20	1"	1 1/4"	3/8"	10.0	178	178	140	200	90	180	473	209	194	108	125	155	101	264	365
CM5-6	90	1.27	2.20	1"	1 1/4"	3/8"	10.0	178	178	140	200	90	180	509	245	230	144	125	155	101	264	365
CM5-7	100	1.68	2.90	1"	1 1/4"	3/8"	12.0	198	199	160	220	100	190	525	252	237	144	140	170	108	273	381
CM5-8	100	1.68	2.90	1"	1 1/4"	3/8"	12.0	198	199	160	220	100	190	561	288	273	180	140	170	108	273	381

3 x 575 V, 60 Hz (supply voltage H)

Pump type	Frame size	P_2 [kW]	Dimensions [mm]																		
			A1	A2	A3	A4	B1	B2	B3	H	H1	H2	L1	L2	L3	L4	L5	L6	L7	L8	L9
CM5-2	80	1.10	1"	1 1/4"	3/8"	10.5	141	158	125	192	75	165	366	132	108	72	96	137	60	234	294
CM5-3	80	1.10	1"	1 1/4"	3/8"	10.5	141	158	125	192	75	165	366	132	108	72	96	137	60	234	294
CM5-4	90	1.50	1"	1 1/4"	3/8"	10.0	178	178	140	200	90	180	415	191	176	90	125	155	101	224	325
CM5-5	90	2.20	1"	1 1/4"	3/8"	10.0	178	178	140	200	90	180	473	209	194	108	125	155	101	264	365
CM5-6	90	2.20	1"	1 1/4"	3/8"	10.0	178	178	140	200	90	180	509	245	230	144	125	155	101	264	365
CM5-7	100	3.00	1"	1 1/4"	3/8"	12.0	198	199	160	220	100	190	525	252	237	144	140	170	108	273	381
CM5-8	100	3.00	1"	1 1/4"	3/8"	12.0	198	199	160	220	100	190	561	288	273	180	140	170	108	273	381

1 x 115/230 V, 60 Hz (supply voltage B, B1)
1 x 230 V, 60 Hz (supply voltage B2)
1 x 220 V, 60 Hz (supply voltage A)

Pump type	Frame size	P_2 [kW]	Dimensions [mm]																		
			A1	A2	A3	A4	B1	B2	B3	H	H1	H2	L1	L2	L3	L4	L5	L6	L7	L8	L9
CM5-2	80	0.84*/0.78	1"	1 1/4"	3/8"	10.5	141	158	125	208	75	165	346	132	108	72	96	137	60	214	274
CM5-3	80	1.14*/1.10	1"	1 1/4"	3/8"	10.5	206	158	125	208	75	165	346	132	108	72	96	137	60	214	274
CM5-4	90	1.54*/1.50	1"	1 1/4"	3/8"	10.0	178	178	140	229	90	180	415	191	176	90	125	155	101	224	325

* Applies to supply voltage A.

3 x 200/346 V, 50 Hz; 3 x 200-220/346-380 V, 60 Hz (supply voltage G)

Pump type	Frame size	P_2 [kW]		Dimensions [mm]																		
		50 Hz	60 Hz	A1	A2	A3	A4	B1	B2	B3	H	H1	H2	L1	L2	L3	L4	L5	L6	L7	L8	L9
CM5-2	71B	0.43	0.74	1"	1 1/4"	3/8"	10.5	141	158	125	184	75	165	306	132	108	72	96	137	60	174	234
CM5-3	80C	0.74	1.28	1"	1 1/4"	3/8"	10.5	141	158	125	184	75	165	366	132	108	72	96	137	60	234	294
CM5-4	90LE	1.27	2.20	1"	1 1/4"	3/8"	10.0	178	178	140	200	90	180	455	191	176	90	125	155	101	264	365
CM5-5	90LE	1.27	2.20	1"	1 1/4"	3/8"	10.0	178	178	140	200	90	180	473	209	194	108	125	155	101	264	365
CM5-6	90LE	1.27	2.20	1"	1 1/4"	3/8"	10.0	178	178	140	200	90	180	509	245	230	144	125	155	101	264	365
CM5-7	100LC	1.68	2.90	1"	1 1/4"	3/8"	12.0	198	199	160	220	100	190	525	252	237	144	140	170	108	273	381
CM5-8	100LC	1.68	2.90	1"	1 1/4"	3/8"	12.0	198	199	160	220	100	190	561	288	273	180	140	170	108	273	381

All dimensions are in mm unless otherwise stated.

CM 10-A

(A = cast iron EN-GJL-200)

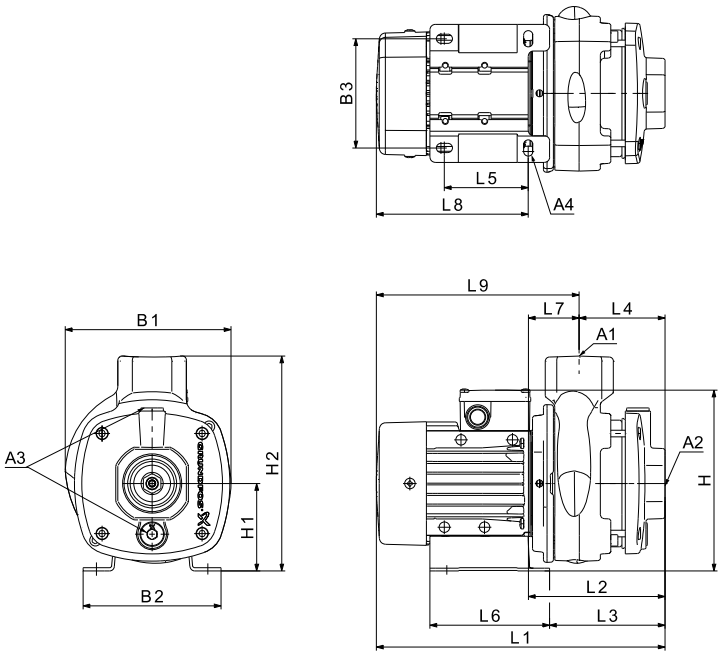

TM06 7512 3616

Dimensions

3 x 208-230/440-480 V, 60 Hz (supply voltage E)
3 x 380-415 V, 50 Hz; 3 x 440-480 V, 60 Hz (supply voltage J)
3 x 220-240/380-415 V, 50 Hz; 3 x 220-255/380-440 V, 60 Hz (supply voltage O)

Pump type	Frame size	P_2 [kW]		Dimensions [mm]																		
		50 Hz	60 Hz	A1	A2	A3	A4	B1	B2	B3	H	H1	H2	L1	L2	L3	L4	L5	L6	L7	L8	L9
CM10-1	80	0.64	1.10	1 1/2"	1 1/2"	3/8"	10.5	190	158	125	209	100	242	390	156	131	97	95	137	59	234	292
CM10-2	90	1.27	2.2	1 1/2"	1 1/2"	3/8"	12	190	199	160	210	100	242	451	179	164	97	140	170	82	272	354
CM10-3	112	2.3	4.0	1 1/2"	1 1/2"	3/8"	12	220	228	190	246	112	254	550	248	232	127	140	172	120	302	423

3 x 575 V, 60 Hz (supply voltage H)

Pump type	Frame size	P_2 [kW]	Dimensions [mm]																		
			A1	A2	A3	A4	B1	B2	B3	H	H1	H2	L1	L2	L3	L4	L5	L6	L7	L8	L9
CM10-1	80	1.1	1 1/2"	1 1/2"	3/8"	10.5	190	158	125	217	100	242	390	156	131	97	95	137	59	234	292
CM10-2	100	3.0	1 1/2"	1 1/2"	3/8"	12	198	199	160	220	100	242	467	194	179	97	140	170	97	273	370
CM10-3	112	4.0	1 1/2"	1 1/2"	3/8"	12	220	228	190	246	112	254	550	248	232	127	140	172	120	302	423
CM10-5	132	7.5	1 1/2"	1 1/2"	3/8"	12	262	228	190	271	112	231	633	359	343	195	140	172	164	274	438

1 x 115/230 V, 60 Hz (supply voltage B, B1)
1 x 230 V, 60 Hz (supply voltage B2)
1 x 220 V, 60 Hz (supply voltage A)

Pump type	Frame size	P_2 [kW]	Dimensions [mm]																		
			A1	A2	A3	A4	B1	B2	B3	H	H1	H2	L1	L2	L3	L4	L5	L6	L7	L8	L9
CM10-1	80	1.14*/1.10	1 1/2"	1 1/2"	3/8"	10.5	255	158	125	233	100	242	370	156	131	97	95	137	59	214	272

* Applies to supply voltage A.

3 x 200/346 V, 50 Hz; 3 x 200-220/346-380 V, 60 Hz (supply voltage G)

Pump type	Frame size	P_2 [kW]		Dimensions [mm]																		
		50 Hz	60 Hz	A1	A2	A3	A4	B1	B2	B3	H	H1	H2	L1	L2	L3	L4	L5	L6	L7	L8	L9
CM10-1	80	0.74	1.28	1 1/2"	1 1/2"	3/8"	10.5	190	158	125	209	100	242	390	156	131	97	95	137	59	234	292
CM10-2	90	1.27	2.20	1 1/2"	1 1/2"	3/8"	12.0	190	199	160	210	100	242	451	179	164	97	140	170	82	272	354
CM10-3	112	2.30	4.00	1 1/2"	1 1/2"	3/8"	12.0	220	228	190	246	112	254	550	248	232	127	140	172	120	302	423

All dimensions are in mm unless otherwise stated.

CM 10-I and CM 10-G

(I = EN 1.4301/AISI 304 and G = EN 1.4401/AISI 316)

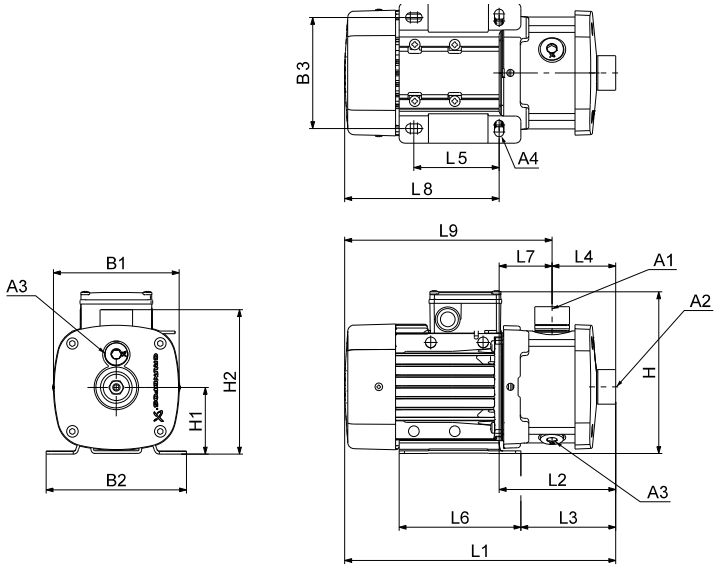

TM06 7507 3616

Dimensions

3 x 208-230/440-480 V, 60 Hz (supply voltage E)
3 x 380-415 V, 50 Hz; 3 x 440-480 V, 60 Hz (supply voltage J)
3 x 220-240/380-415 V, 50 Hz; 3 x 220-255/380-440 V, 60 Hz (supply voltage O)

Pump type	Frame size	P_2 [kW]		Dimensions [mm]																		
		50 Hz	60 Hz	A1	A2	A3	A4	B1	B2	B3	H	H1	H2	L1	L2	L3	L4	L5	L6	L7	L8	L9
CM10-1	80	0.64	1.10	1 1/2"	1 1/2"	3/8"	10.5	141	158	125	209	100	219	420	186	161	105	95	137	81	234	315
CM10-2	90	1.27	2.20	1 1/2"	1 1/2"	3/8"	12.0	178	199	160	210	100	219	491	219	204	105	140	170	114	272	386
CM10-3	112	2.30	4.00	1 1/2"	1 1/2"	3/8"	12.0	220	228	190	246	112	231	560	258	242	105	140	172	153	302	455
CM10-4	132	3.18	5.50	1 1/2"	1 1/2"	3/8"	12.0	220	228	190	246	112	231	590	288	272	135	140	172	153	302	455
CM10-5	132	3.18	5.50	1 1/2"	1 1/2"	3/8"	12.0	220	228	190	246	112	231	650	348	332	195	140	172	153	302	455

Please note that the dimension H is smaller than H2 for CM 10-1 and CM 10-2.

3 x 575 V, 60 Hz (supply voltage H)

Pump type	Frame size	P_2 [kW]	Dimensions [mm]																		
			A1	A2	A3	A4	B1	B2	B3	H	H1	H2	L1	L2	L3	L4	L5	L6	L7	L8	L9
CM10-1	80	1.10	1 1/2"	1 1/2"	3/8"	10.5	141	158	125	217	100	219	420	186	161	105	95	137	81	234	315
CM10-2	100	3.00	1 1/2"	1 1/2"	3/8"	12.0	198	199	160	220	100	219	507	234	219	105	140	170	129	273	402
CM10-3	112	4.00	1 1/2"	1 1/2"	3/8"	12.0	220	228	190	246	112	231	560	258	242	105	140	172	153	302	455
CM10-4	132	5.50	1 1/2"	1 1/2"	3/8"	12.0	220	228	190	246	112	231	590	288	272	135	140	172	153	302	455

Please note that the dimension H is smaller than H2 for CM 10-1 and CM 10-2.

1 x 115/230 V, 60 Hz (supply voltage B)
1 x 230 V, 60 Hz (supply voltage B2)
1 x 220 V, 60 Hz (supply voltage A)

Pump type	Frame size	P_2 [kW]	Dimensions [mm]																	
			A1	A2	A3	A4	B1	B2	B3	H	H1	H2	L1	L2	L3	L4	L5	L6	L7	L8	L9
CM10-1	80	1.14*/1.10	1 1/2"	1 1/2"	3/8"	10.5	206	158	125	233	100	219	400	186	161	105	95	137	81	214	295

* Applies to supply voltage A.

3 x 200/346 V, 50 Hz; 3 x 200-220/346-380 V, 60 Hz (supply voltage G)

Pump type	Frame size	P_2 [kW]		Dimensions [mm]																		
		50 Hz	60 Hz	A1	A2	A3	A4	B1	B2	B3	H	H1	H2	L1	L2	L3	L4	L5	L6	L7	L8	L9
CM10-1	80	0.74	1.28	1 1/2"	1 1/2"	3/8"	10.5	141	158	125	209	100	219	420	186	161	105	95	137	81	234	315
CM10-2	90	1.27	2.20	1 1/2"	1 1/2"	3/8"	12.0	178	199	160	210	100	219	491	219	204	105	140	170	114	272	386
CM10-3	112	2.30	4.00	1 1/2"	1 1/2"	3/8"	12.0	220	228	190	246	112	231	560	258	242	105	140	172	153	302	455
CM10-4	132	3.18	5.50	1 1/2"	1 1/2"	3/8"	12.0	220	228	190	246	112	231	590	288	272	135	140	172	153	302	455
CM10-5	132	3.18	5.50	1 1/2"	1 1/2"	3/8"	12.0	220	228	190	246	112	231	650	348	332	195	140	172	153	302	455

All dimensions are in mm unless otherwise stated.
Please note that the dimension H is smaller than H2 for CM 10-1 and CM 10-2.

CM 15-A

(A = cast iron EN-GJL-200)

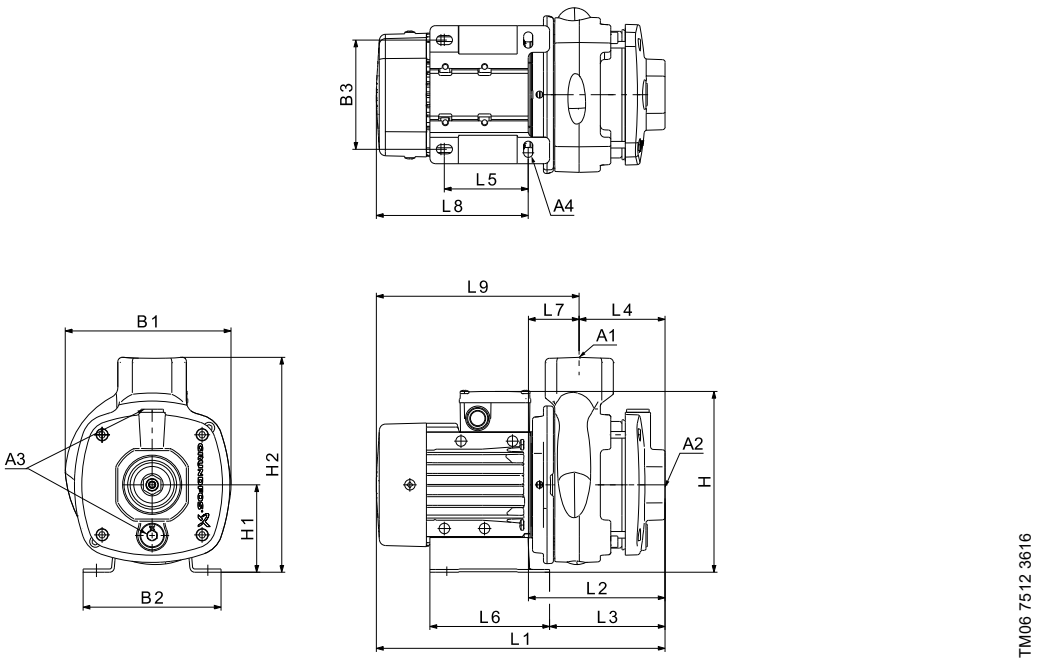

TM06 7512 3616

Dimensions

3 x 208-230/440-480 V, 60 Hz (supply voltage E)
3 x 380-415 V, 50 Hz; 3 x 440-480 V, 60 Hz (supply voltage J)
3 x 220-240/380-415 V, 50 Hz; 3 x 220-255/380-440 V, 60 Hz (supply voltage O)

Pump type	Frame size	P_2 [kW]		Dimensions [mm]																		
		50 Hz	60 Hz	A1	A2	A3	A4	B1	B2	B3	H	H1	H2	L1	L2	L3	L4	L5	L6	L7	L8	L9
CM15-1	90	1.27	2.20	2"	2"	3/8"	12	190	199	160	210	100	242	451	179	164	97	140	170	82	272	354
CM15-2	112	2.30	4.00	2"	2"	3/8"	12	220	228	190	246	112	254	520	218	202	97	140	172	120	302	423
CM15-3	132	3.70	6.40	2"	2"	3/8"	12	220	228	190	246	112	254	550	248	232	127	140	172	120	302	423

3 x 575 V, 60 Hz (supply voltage H)

Pump type	Frame size	P_2 [kW]	Dimensions [mm]																		
			A1	A2	A3	A4	B1	B2	B3	H	H1	H2	L1	L2	L3	L4	L5	L6	L7	L8	L9
CM15-1	90	2.20	2"	2"	3/8"	12.0	190	199	160	210	100	242	451	179	164	97	140	170	82	272	354
CM15-2	112	4.00	2"	2"	3/8"	12.0	220	228	190	246	112	254	520	218	202	97	140	172	120	302	423
CM15-3	132	7.50	2"	2"	3/8"	12.0	262	228	190	271	112	254	533	259	243	127	140	172	132	274	406

3 x 200/346 V, 50 Hz; 3 x 200-220/346-380 V, 60 Hz (supply voltage G)

Pump type	Frame size	P_2 [kW]		Dimensions [mm]																		
		50 Hz	60 Hz	A1	A2	A3	A4	B1	B2	B3	H	H1	H2	L1	L2	L3	L4	L5	L6	L7	L8	L9
CM15-1	90	1.27	2.20	2"	2"	3/8"	12.0	190	199	160	210	100	242	451	179	164	97	140	170	82	272	354
CM15-2	112	2.30	4.00	2"	2"	3/8"	12.0	220	228	190	246	112	254	520	218	202	97	140	172	120	302	423
CM15-3	132	3.70	6.40	2"	2"	3/8"	12.0	220	228	190	246	112	254	550	248	232	127	140	172	120	302	423

All dimensions are in mm unless otherwise stated.

CM 15-I and CM 15-G

(I = EN 1.4301/AISI 304 and G = EN 1.4401/AISI 316)

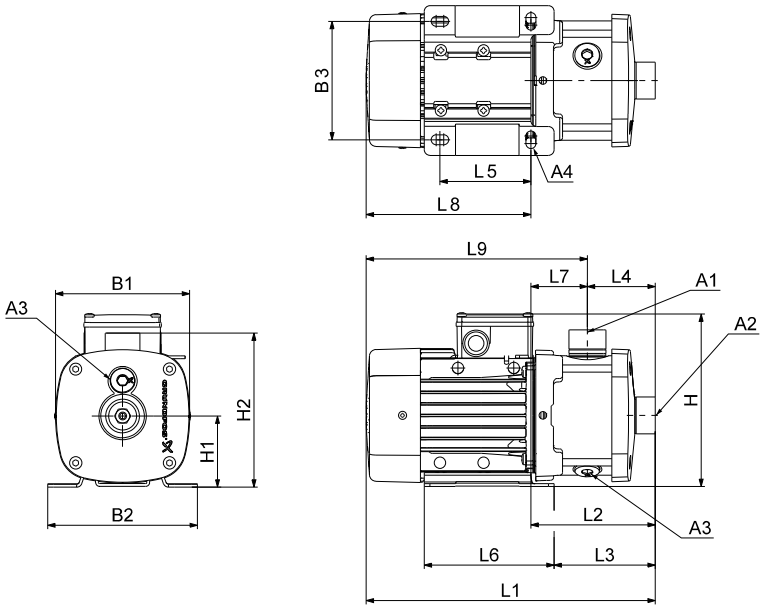

TM06 7507 3616

Dimensions

3 x 208-230/440-480 V, 60 Hz (supply voltage E)
3 x 380-415 V, 50 Hz; 3 x 440-480 V, 60 Hz (supply voltage J)
3 x 220-240/380-415 V, 50 Hz; 3 x 220-255/380-440 V, 60 Hz (supply voltage O)

Pump type	Frame size	P_2 [kW]		Dimensions [mm]																		
		50 Hz	60 Hz	A1	A2	A3	A4	B1	B2	B3	H	H1	H2	L1	L2	L3	L4	L5	L6	L7	L8	L9
CM15-1	90	1.27	2.20	2"	2"	3/8"	12.0	178	199	160	210	100	217	491	219	204	105	140	170	114	272	386
CM15-2	112	2.30	4.00	2"	2"	3/8"	12.0	220	228	190	246	112	229	560	258	242	105	140	172	153	302	455
CM15-3	132	3.70	6.40	2"	2"	3/8"	12.0	220	228	190	246	112	229	560	258	242	105	140	172	153	302	455

Please note that the dimension H is smaller than H2 for CM 15-1.

3 x 575 V, 60 Hz (supply voltage H)

Pump type	Frame size	P_2 [kW]	Dimensions [mm]																		
			A1	A2	A3	A4	B1	B2	B3	H	H1	H2	L1	L2	L3	L4	L5	L6	L7	L8	L9
CM15-1	90	2.20	2"	2"	3/8"	12.0	178	199	160	210	100	217	491	219	204	105	140	170	114	272	386
CM15-2	112	4.00	2"	2"	3/8"	12.0	220	228	190	246	112	229	560	258	242	105	140	172	153	302	455
CM15-3	132	7.50	2"	2"	3/8"	12.0	262	228	190	271	112	229	543	269	253	105	140	172	164	274	438

Please note that the dimension H is smaller than H2 for CM 15-1.

3 x 200/346 V, 50 Hz; 3 x 200-220/346-380 V, 60 Hz (supply voltage G)

Pump type	Frame size	P_2 [kW]		Dimensions [mm]																		
		50 Hz	60 Hz	A1	A2	A3	A4	B1	B2	B3	H	H1	H2	L1	L2	L3	L4	L5	L6	L7	L8	L9
CM15-1	90	1.27	2.20	2"	2"	3/8"	12	178	199	160	210	100	217	491	219	204	105	140	170	114	272	386
CM15-2	112	2.30	4.00	2"	2"	3/8"	12	220	228	190	246	112	229	560	258	242	105	140	172	153	302	455
CM15-3	132	3.70	6.40	2"	2"	3/8"	12	220	228	190	246	112	229	560	258	242	105	140	172	153	302	455

Please note that the dimension H is smaller than H2 for CM 15-1.
All dimensions are in mm unless otherwise stated.

CM 25-A

(A = cast iron EN-GJL-200)

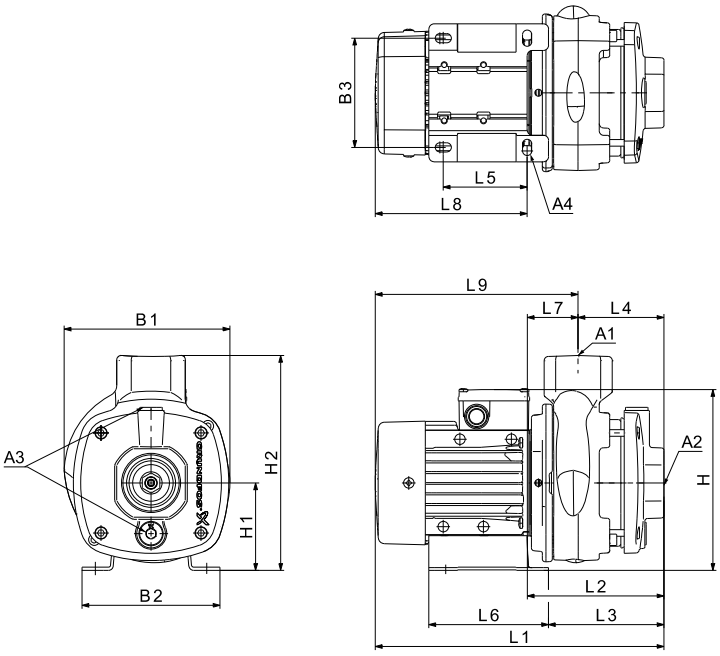

TM06 7512 3616

Dimensions

3 x 208-230/440-480 V, 60 Hz (supply voltage E)
3 x 380-415 V, 50 Hz; 3 x 440-480 V, 60 Hz (supply voltage J)
3 x 220-240/380-415 V, 50 Hz; 3 x 220-255/380-440 V, 60 Hz (supply voltage O)

Pump type	Frame size	P_2 [kW]		Dimensions [mm]																		
		50 Hz	60 Hz	A1	A2	A3	A4	B1	B2	B3	H	H1	H2	L1	L2	L3	L4	L5	L6	L7	L8	L9
CM25-1	112	2.30	4.00	2"	2"	3/8"	12.0	220	228	190	246	112	254	520	218	202	97	140	172	120	302	423
CM25-2	132	3.70	6.40	2"	2"	3/8"	12.0	220	228	190	246	112	254	520	218	202	97	140	172	120	302	423

3 x 575 V, 60 Hz (supply voltage H)

Pump type	Frame size	P_2 [kW]	Dimensions [mm]																		
			A1	A2	A3	A4	B1	B2	B3	H	H1	H2	L1	L2	L3	L4	L5	L6	L7	L8	L9
CM25-1	112	4.00	2"	2"	3/8"	12.0	220	228	190	246	112	254	520	218	202	97	140	172	120	302	423
CM25-2	132	7.50	2"	2"	3/8"	12.0	262	228	190	271	112	254	503	229	213	97	140	172	132	274	406

3 x 200/346 V, 50 Hz; 3 x 200-220/346-380 V, 60 Hz (supply voltage G)

Pump type	Frame size	P_2 [kW]		Dimensions [mm]																		
		50 Hz	60 Hz	A1	A2	A3	A4	B1	B2	B3	H	H1	H2	L1	L2	L3	L4	L5	L6	L7	L8	L9
CM25-1	112	2.30	4.00	2"	2"	3/8"	12.0	220	228	190	246	112	254	520	218	202	97	140	172	120	302	423
CM25-2	132	3.70	6.40	2"	2"	3/8"	12.0	220	228	190	246	112	254	520	218	202	97	140	172	120	302	423

All dimensions are in mm unless otherwise stated.

CM 25-I and CM 25-G

(I = EN 1.4301/AISI 304 and G = EN 1.4401/AISI 316)

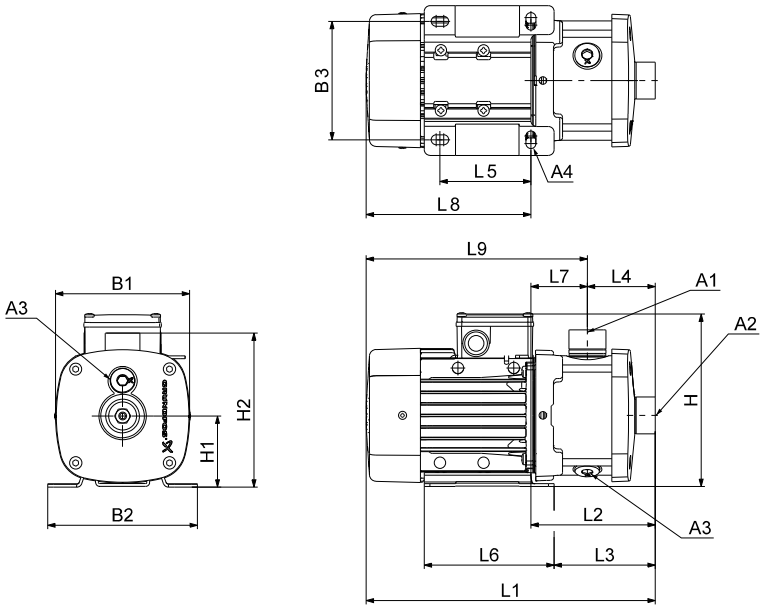

TM06 7507 3616

Dimensions

3 x 208-230/440-480 V, 60 Hz (supply voltage E)
3 x 380-415 V, 50 Hz; 3 x 440-480 V, 60 Hz (supply voltage J)
3 x 220-240/380-415 V, 50 Hz; 3 x 220-255/380-440 V, 60 Hz (supply voltage O)

Pump type	Frame size	P_2 [kW]		Dimensions [mm]																		
		50 Hz	60 Hz	A1	A2	A3	A4	B1	B2	B3	H	H1	H2	L1	L2	L3	L4	L5	L6	L7	L8	L9
CM25-1	112	2.30	4.00	2"	2"	3/8"	12.0	220	228	190	246	112	229	560	258	242	105	140	172	153	302	455
CM25-2	132	3.70	6.40	2"	2"	3/8"	12.0	220	228	190	246	112	229	560	258	242	105	140	172	153	302	455

3 x 575 V, 60 Hz (supply voltage H)

Pump type	Frame size	P_2 [kW]	Dimensions [mm]																		
			A1	A2	A3	A4	B1	B2	B3	H	H1	H2	L1	L2	L3	L4	L5	L6	L7	L8	L9
CM25-1	112	4.00	2"	2"	3/8"	12.0	220	228	190	246	112	229	560	258	242	105	140	172	153	302	455
CM25-2	132	7.50	2"	2"	3/8"	12.0	262	228	190	271	112	229	543	269	253	105	140	172	164	274	438

3 x 200/346 V, 50 Hz; 3 x 200-220/346-380 V, 60 Hz (supply voltage G)

Pump type	Frame size	P_2 [kW]		Dimensions [mm]																		
		50 Hz	60 Hz	A1	A2	A3	A4	B1	B2	B3	H	H1	H2	L1	L2	L3	L4	L5	L6	L7	L8	L9
CM25-1	112	2.30	4.00	2"	2"	3/8"	12.0	220	228	190	246	112	229	560	258	242	105	140	172	153	302	455
CM25-2	132	3.70	6.40	2"	2"	3/8"	12.0	220	228	190	246	112	229	560	258	242	105	140	172	153	302	455

All dimensions are in mm unless otherwise stated.

24. Dimensions, CM self-priming 50 Hz and 60 Hz

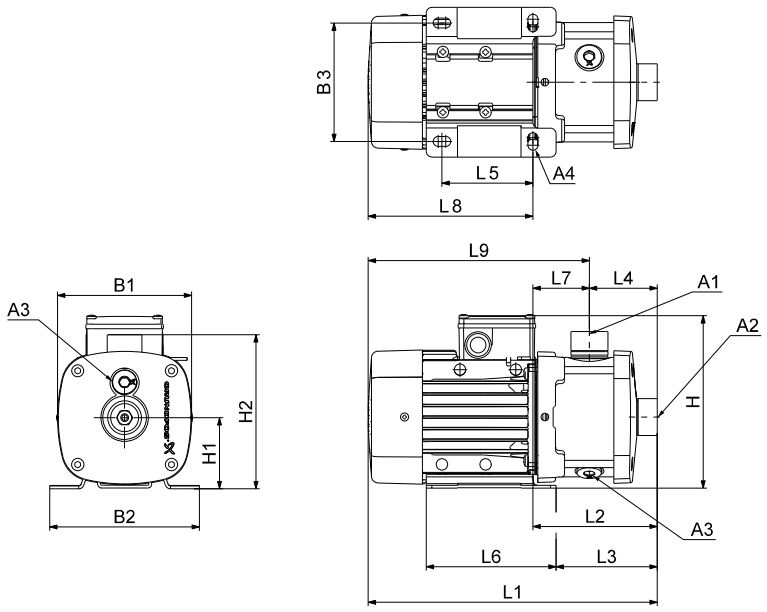

TM06 7507 3616

Dimensions

1 x 220-240 V, 50 Hz (supply voltage C)

Pump type	Frame size	P_2 [kW]	Dimensions [mm]																		
			A1	A2	A3	A4	B1	B2	B3	H	H1	H2	L1	L2	L3	L4	L5	L6	L7	L8	L9
CM 1-3	71	0.30	1"	1"	3/8"	10.5	141	158	125	208	75	165	378	204	180	144	96	137	60	174	234
CM 1-4	71	0.50	1"	1"	3/8"	10.5	141	158	125	208	75	165	378	204	180	144	96	137	60	174	234
CM 1-5	71	0.50	1"	1"	3/8"	10.5	141	158	125	208	75	165	414	240	216	180	96	137	60	174	234
CM 1-6	71	0.50	1"	1"	3/8"	10.5	141	158	125	208	75	165	414	240	216	180	96	137	60	174	234
CM 3-3	71	0.50	1"	1"	3/8"	10.5	141	158	125	208	75	165	378	204	180	144	96	137	60	174	234
CM 3-4	71	0.50	1"	1"	3/8"	10.5	141	158	125	208	75	165	378	204	180	144	96	137	60	174	234
CM 3-5	71	0.50	1"	1"	3/8"	10.5	141	158	125	208	75	165	414	240	216	180	96	137	60	174	234
CM 3-6	80	0.67	1"	1"	3/8"	10.5	141	158	125	208	75	165	454	240	216	180	96	137	60	214	274
CM 5-3	71	0.50	1"	1"	3/8"	10.5	141	158	125	208	75	165	378	204	180	144	96	137	60	174	234
CM 5-4	80	0.67	1"	1"	3/8"	10.5	141	158	125	208	75	165	418	204	180	144	96	137	60	214	274
CM 5-5	80	0.90	1"	1"	3/8"	10.5	141	158	125	208	75	165	454	240	216	180	96	137	60	214	274
CM 5-6	90	1.30	1"	1"	3/8"	10.0	178	178	140	229	90	180	505	281	266	180	125	155	101	224	325
CM 5-7	90	1.30	1"	1"	3/8"	10.0	178	178	140	229	90	180	541	317	302	216	125	155	101	224	325

1 x 220 V, 60 Hz (supply voltage A)

Pump type	Frame size	P_2 [kW]	Dimensions [mm]																		
			A1	A2	A3	A4	B1	B2	B3	H	H1	H2	L1	L2	L3	L4	L5	L6	L7	L8	L9
CM 1-3	71	0.60	1"	1"	3/8"	10.5	141	158	125	208	75	165	378	204	180	144	96	137	60	174	234
CM 1-4	71	0.60	1"	1"	3/8"	10.5	141	158	125	208	75	165	378	204	180	144	96	137	60	174	234
CM 3-3	71	0.60	1"	1"	3/8"	10.5	141	158	125	208	75	165	378	204	180	144	96	137	60	174	234
CM 3-4	80	0.84	1"	1"	3/8"	10.5	141	158	125	208	75	165	418	204	180	144	96	137	60	214	274
CM 5-3	80	1.14	1"	1"	3/8"	10.5	141	158	125	208	75	165	418	204	180	144	96	137	60	214	274
CM 5-4	90	1.54	1"	1"	3/8"	10.0	178	178	140	229	90	180	469	245	230	144	125	155	101	224	325

All dimensions are in mm unless otherwise stated.

25. Dimensions, CME 60 Hz and 50/60 Hz

CME 1-A

(A = cast iron EN-GJL-200)

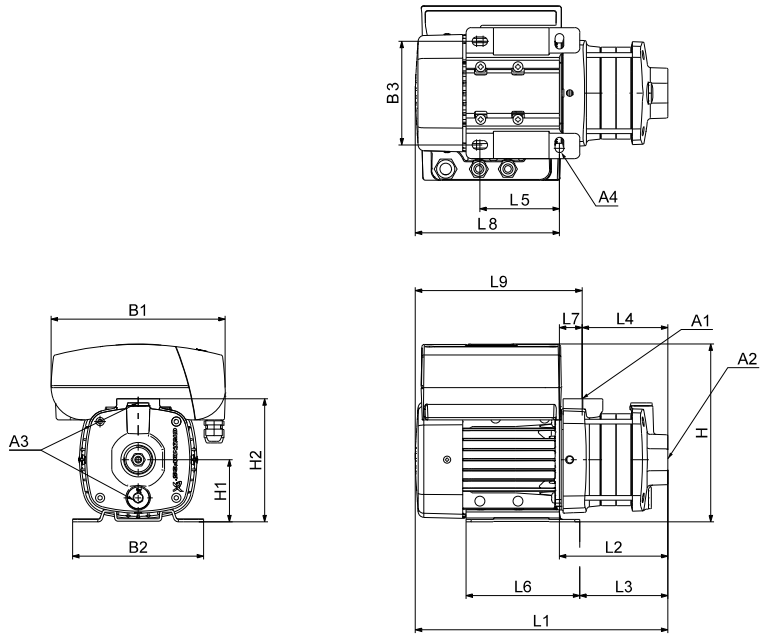

TM06 7510 3616

Dimensions

3 x 380-500 V, 50/60 Hz (supply voltage S)
3 x 440-480 V, 50/60 Hz (supply voltage T)

Pump type	Frame size	P_2 [kW]	Dimensions [mm]																		
			A1	A2	A3	A4	B1	B2	B3	H	H1	H2	L1	L2	L3	L4	L5	L6	L7	L8	L9
CME1-2	71	0.55	1"	1"	3/8"	10.5	212	158	125	233	75	149	348	112	87	85	96	137	27	236	263
CME1-3	71	0.55	1"	1"	3/8"	10.5	212	158	125	233	75	149	366	130	105	103	96	137	27	236	263
CME1-4	71	0.55	1"	1"	3/8"	10.5	212	158	125	233	75	149	384	148	123	121	96	137	27	236	263
CME1-5	80	1.10	1"	1"	3/8"	10.5	212	158	125	233	75	149	402	166	141	139	96	137	27	236	263

1 x 200-240 V, 50/60 Hz (supply voltage U)

Pump type	Frame size	P_2 [kW]	Dimensions [mm]																		
			A1	A2	A3	A4	B1	B2	B3	H	H1	H2	L1	L2	L3	L4	L5	L6	L7	L8	L9
CME1-2	71	0.55	1"	1"	3/8"	10.5	212	158	125	233	75	149	308	112	87	85	96	137	27	196	223
CME1-3	71	0.55	1"	1"	3/8"	10.5	212	158	125	233	75	149	326	130	105	103	96	137	27	196	223
CME1-4	71	0.55	1"	1"	3/8"	10.5	212	158	125	233	75	149	344	148	123	121	96	137	27	196	223
CME1-5	80	1.10	1"	1"	3/8"	10.5	212	158	125	233	75	149	362	166	141	139	96	137	27	196	223

3x 200-240 V, 50/60 Hz (supply voltage V)

Pump type	Frame size	P_2 [kW]	Dimensions [mm]																		
			A1	A2	A3	A4	B1	B2	B3	H	H1	H2	L1	L2	L3	L4	L5	L6	L7	L8	L9
CME1-5	80	1.10	1"	1"	3/8"	10.5	267	158	125	233	75	151	402	166	141	139	96	137	27	236	263

All dimensions are in mm unless otherwise stated.

CME 1-I and CME 1-G

(I = EN 1.4301/AISI 304 and G = EN 1.4401/AISI 316)

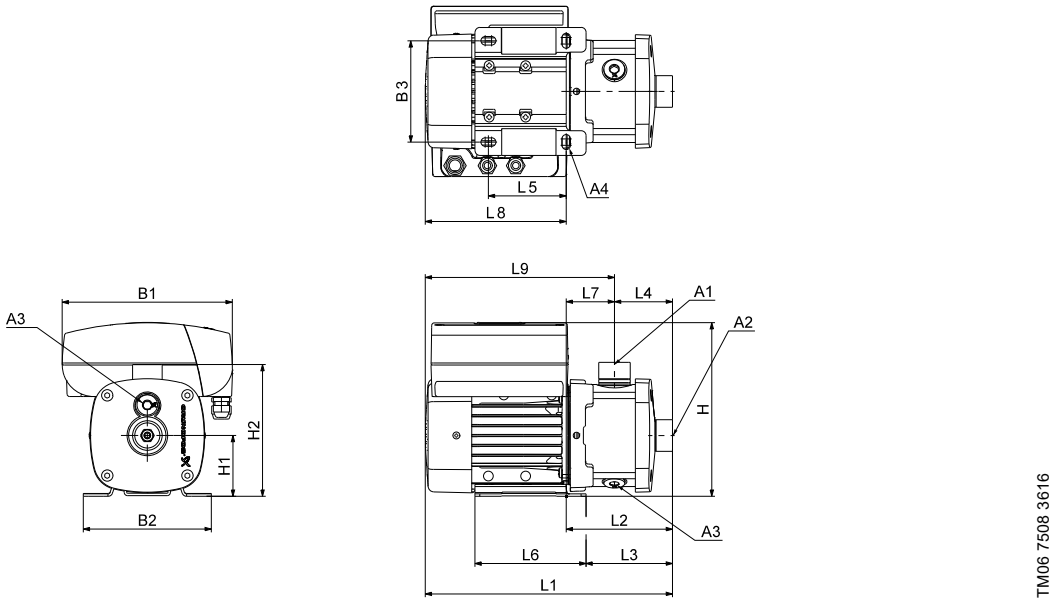

Dimensions

3 x 380-500 V, 50/60 Hz (supply voltage S)
3 x 440-480 V, 50/60 Hz (supply voltage T)

Pump type	Frame size	P_2 [kW]	Dimensions [mm]																		
			A1	A2	A3	A4	B1	B2	B3	H	H1	H2	L1	L2	L3	L4	L5	L6	L7	L8	L9
CME1-2	71	0.55	1"	1"	3/8"	10.5	212	158	125	233	75	165	368	132	107	72	96	137	60	236	296
CME1-3	71	0.55	1"	1"	3/8"	10.5	212	158	125	233	75	165	368	132	107	72	96	137	60	236	296
CME1-4	71	0.55	1"	1"	3/8"	10.5	212	158	125	233	75	165	386	150	125	90	96	137	60	236	296
CME1-5	80	1.10	1"	1"	3/8"	10.5	212	158	125	233	75	165	404	168	143	108	96	137	60	236	296
CME1-6	80	1.10	1"	1"	3/8"	10.5	212	158	125	233	75	165	440	204	179	144	96	137	60	236	296
CME1-7	80	1.10	1"	1"	3/8"	10.5	212	158	125	233	75	165	440	204	179	144	96	137	60	236	296
CME1-8	80	1.10	1"	1"	3/8"	10.5	212	158	125	233	75	165	476	240	215	180	96	137	60	236	296
CME1-9	90	1.50	1"	1"	3/8"	10.5	267	178	140	248	90	181	483	285	270	180	125	155	105	198	303

1 x 200-240 V, 50/60 Hz (supply voltage U)

Pump type	Frame size	P_2 [kW]	Dimensions [mm]																		
			A1	A2	A3	A4	B1	B2	B3	H	H1	H2	L1	L2	L3	L4	L5	L6	L7	L8	L9
CME1-2	71	0.55	1"	1"	3/8"	10.5	212	158	125	233	75	165	328	132	107	72	96	137	60	196	256
CME1-3	71	0.55	1"	1"	3/8"	10.5	212	158	125	233	75	165	328	132	107	72	96	137	60	196	256
CME1-4	71	0.55	1"	1"	3/8"	10.5	212	158	125	233	75	165	346	150	125	90	96	137	60	196	256
CME1-5	80	1.10	1"	1"	3/8"	10.5	212	158	125	233	75	165	364	168	143	108	96	137	60	196	256
CME1-6	80	1.10	1"	1"	3/8"	10.5	212	158	125	233	75	165	400	204	179	144	96	137	60	196	256
CME1-7	80	1.10	1"	1"	3/8"	10.5	212	158	125	233	75	165	400	204	179	144	96	137	60	196	256
CME1-8	80	1.10	1"	1"	3/8"	10.5	212	158	125	233	75	165	436	240	215	180	96	137	60	196	256
CME1-9	90	1.50	1"	1"	3/8"	10.5	212	178	140	248	90	181	443	285	270	180	125	155	105	158	263

3 x 200-240 V, 50/60 Hz (supply voltage V)

Pump type	Frame size	P_2 [kW]	Dimensions [mm]																		
			A1	A2	A3	A4	B1	B2	B3	H	H1	H2	L1	L2	L3	L4	L5	L6	L7	L8	L9
CME1-5	80	1.10	1"	1"	3/8"	10.5	267	158	125	233	75	165	404	168	143	108	96	137	60	236	296
CME1-6	80	1.10	1"	1"	3/8"	10.5	267	158	125	233	75	165	440	204	179	144	96	137	60	236	296
CME1-7	80	1.10	1"	1"	3/8"	10.5	267	158	125	233	75	165	440	204	179	144	96	137	60	236	296
CME1-8	80	1.10	1"	1"	3/8"	10.5	267	158	125	233	75	165	476	240	215	180	96	137	60	236	296
CME1-9	90	1.50	1"	1"	3/8"	10.5	267	178	140	248	90	181	483	285	270	180	125	155	105	198	303

All dimensions are in mm unless otherwise stated.

CME 3-A

(A = cast iron EN-GJL-200)

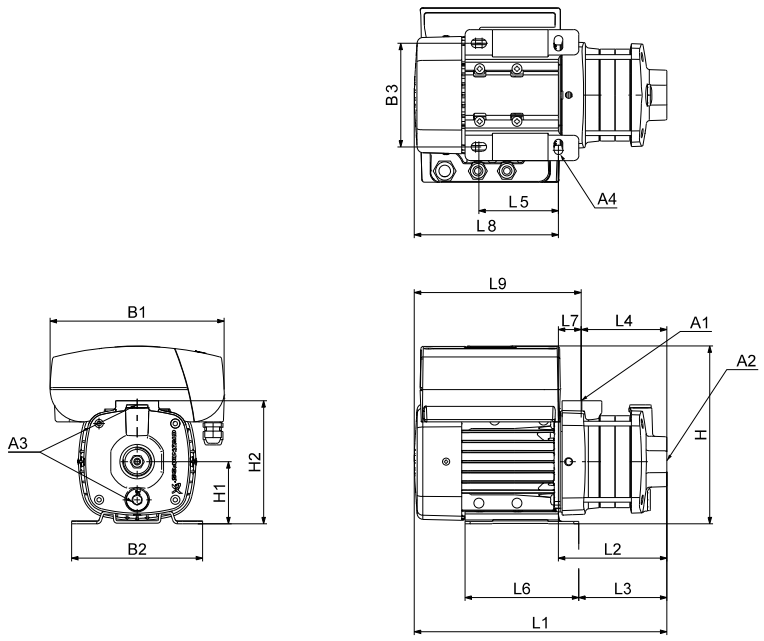

TM06 7510 3616

Dimensions

3 x 380-500 V, 50/60 Hz (supply voltage S)
3 x 440-480 V, 50/60 Hz (supply voltage T)

Pump type	Frame size	P_2 [kW]	Dimensions [mm]																		
			A1	A2	A3	A4	B1	B2	B3	H	H1	H2	L1	L2	L3	L4	L5	L6	L7	L8	L9
CME3-2	71	0.55	1"	1"	3/8"	10.5	212	158	125	233	75	149	348	112	87	85	96	137	27	236	263
CME3-3	80	1.10	1"	1"	3/8"	10.5	212	158	125	233	75	149	366	130	105	103	96	137	27	236	263
CME3-4	80	1.10	1"	1"	3/8"	10.5	212	158	125	233	75	149	384	148	123	121	96	137	27	236	263
CME3-5	80	1.10	1"	1"	3/8"	10.5	212	158	125	233	75	149	402	166	141	139	96	137	27	236	263

1 x 200-240 V, 50/60 Hz (supply voltage U)

Pump type	Frame size	P_2 [kW]	Dimensions [mm]																		
			A1	A2	A3	A4	B1	B2	B3	H	H1	H2	L1	L2	L3	L4	L5	L6	L7	L8	L9
CME3-2	71	0.55	1"	1"	3/8"	10.5	212	158	125	233	75	149	308	112	87	85	96	137	27	196	223
CME3-3	80	1.10	1"	1"	3/8"	10.5	212	158	125	233	75	149	326	130	105	103	96	137	27	196	223
CME3-4	80	1.10	1"	1"	3/8"	10.5	212	158	125	233	75	149	344	148	123	121	96	137	27	196	223
CME3-5	80	1.10	1"	1"	3/8"	10.5	212	158	125	233	75	149	362	166	141	139	96	137	27	196	223

3 x 200-240 V, 50/60 Hz (supply voltage V)

Pump type	Frame size	P_2 [kW]	Dimensions [mm]																		
			A1	A2	A3	A4	B1	B2	B3	H	H1	H2	L1	L2	L3	L4	L5	L6	L7	L8	L9
CME3-3	80	1.10	1"	1"	3/8"	10.5	267	158	125	233	75	151	366	130	105	103	96	137	27	236	263
CME3-4	80	1.10	1"	1"	3/8"	10.5	267	158	125	233	75	151	384	148	123	121	96	137	27	236	263
CME3-5	80	1.10	1"	1"	3/8"	10.5	267	158	125	233	75	151	402	166	141	139	96	137	27	236	263

All dimensions are in mm unless otherwise stated.

CME 3-I and CME 3-G

(I = EN 1.4301/AISI 304 and G = EN 1.4401/AISI 316)

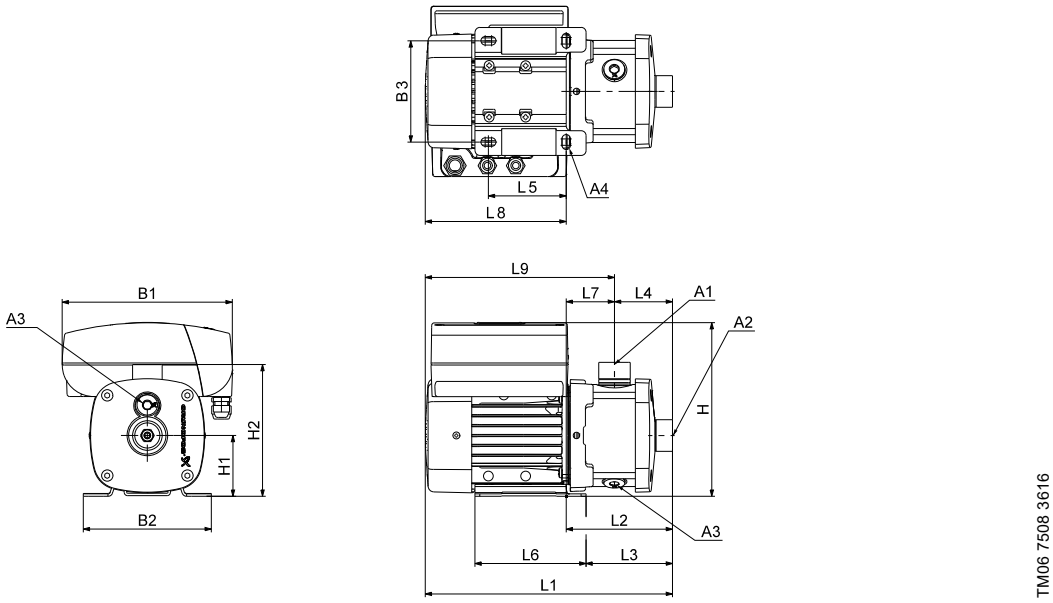

Dimensions

3 x 380-500 V, 50/60 Hz (supply voltage S)
3 x 440-480 V, 50/60 Hz (supply voltage T)

Pump type	Frame size	P_2 [kW]	Dimensions [mm]																		
			A1	A2	A3	A4	B1	B2	B3	H	H1	H2	L1	L2	L3	L4	L5	L6	L7	L8	L9
CME3-2	71	0.55	1"	1"	3/8"	10.5	212	158	125	233	75	165	368	132	107	72	96	137	60	236	296
CME3-3	80	1.10	1"	1"	3/8"	10.5	212	158	125	233	75	165	368	132	107	72	96	137	60	236	296
CME3-4	80	1.10	1"	1"	3/8"	10.5	212	158	125	233	75	165	386	150	125	90	96	137	60	236	296
CME3-5	80	1.10	1"	1"	3/8"	10.5	212	158	125	233	75	165	404	168	143	108	96	137	60	236	296
CME3-6	90	1.50	1"	1"	3/8"	10.5	267	178	140	248	90	181	447	249	234	144	125	155	105	198	303
CME3-7	90	1.50	1"	1"	3/8"	10.5	267	178	140	248	90	181	447	249	234	144	125	155	105	198	303
CME3-8	90	2.20	1"	1"	3/8"	10.5	267	178	140	248	90	181	483	285	270	180	125	155	105	198	303
CME3-9	90	2.20	1"	1"	3/8"	10.5	267	178	140	248	90	181	483	285	270	180	125	155	105	198	303

1 x 200-240 V, 50/60 Hz (supply voltage U)

Pump type	Frame size	P_2 [kW]	Dimensions [mm]																		
			A1	A2	A3	A4	B1	B2	B3	H	H1	H2	L1	L2	L3	L4	L5	L6	L7	L8	L9
CME3-2	71	0.55	1"	1"	3/8"	10.5	212	158	125	233	75	165	328	132	107	72	96	137	60	196	256
CME3-3	80	1.10	1"	1"	3/8"	10.5	212	158	125	233	75	165	328	132	107	72	96	137	60	196	256
CME3-4	80	1.10	1"	1"	3/8"	10.5	212	158	125	233	75	165	346	150	125	90	96	137	60	196	256
CME3-5	80	1.10	1"	1"	3/8"	10.5	212	158	125	233	75	165	364	168	143	108	96	137	60	196	256
CME3-6	90	1.50	1"	1"	3/8"	10.5	212	178	140	248	90	181	407	249	234	144	125	155	105	158	263
CME3-7	90	1.50	1"	1"	3/8"	10.5	212	178	140	248	90	181	407	249	234	144	125	155	105	158	263

3 x 200-240 V, 50/60 Hz (supply voltage V)

Pump type	Frame size	P_2 [kW]	Dimensions [mm]																		
			A1	A2	A3	A4	B1	B2	B3	H	H1	H2	L1	L2	L3	L4	L5	L6	L7	L8	L9
CME3-3	80	1.10	1"	1"	3/8"	10.5	267	158	125	233	75	165	368	132	107	72	96	137	60	236	296
CME3-4	80	1.10	1"	1"	3/8"	10.5	267	158	125	233	75	165	386	150	125	90	96	137	60	236	296
CME3-5	80	1.10	1"	1"	3/8"	10.5	267	158	125	233	75	165	404	168	143	108	96	137	60	236	296
CME3-6	90	1.50	1"	1"	3/8"	10.5	267	178	140	248	90	181	447	249	234	144	125	155	105	198	303
CME3-7	90	1.50	1"	1"	3/8"	10.5	267	178	140	248	90	181	447	249	234	144	125	155	105	198	303
CME3-8	100	2.20	1"	1"	3/8"	12.0	291	200	160	300	100	190	560	290	273	180	140	173	110	270	380
CME3-9	100	2.20	1"	1"	3/8"	12.0	291	200	160	300	100	190	560	290	273	180	140	173	110	270	380

All dimensions are in mm unless otherwise stated.

CME 5-A

(A = cast iron EN-GJL-200)

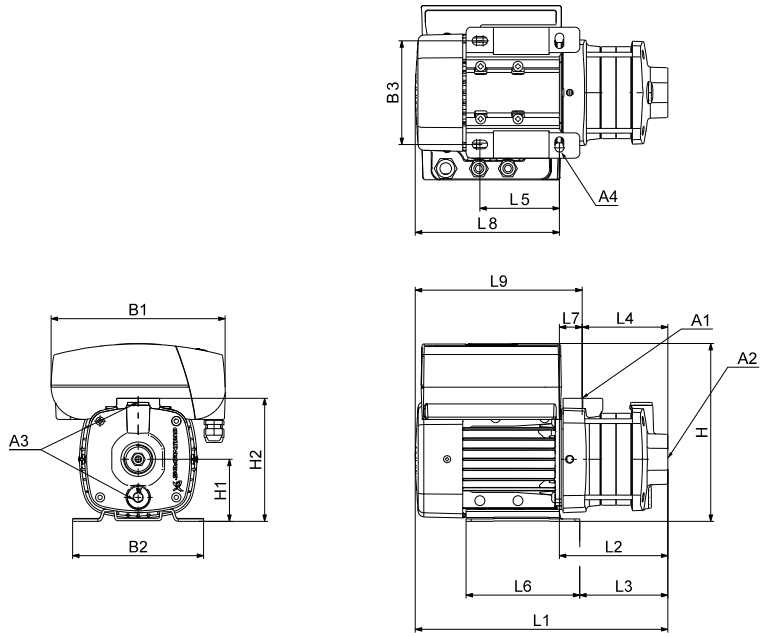

TM06 7510 3616

Dimensions

3 x 380-500 V, 50/60 Hz (supply voltage S)
3 x 440-480 V, 50/60 Hz (supply voltage T)

Pump type	Frame size	P_2 [kW]	Dimensions [mm]																		
			A1	A2	A3	A4	B1	B2	B3	H	H1	H2	L1	L2	L3	L4	L5	L6	L7	L8	L9
CME5-2	80	1.10	1"	1 1/4"	3/8"	10.5	212	158	125	233	75	149	348	112	87	85	96	137	27	236	263
CME5-3	80	1.10	1"	1 1/4"	3/8"	10.5	212	158	125	233	75	149	366	130	105	103	96	137	27	236	263
CME5-4	90	1.50	1"	1 1/4"	3/8"	10.5	267	178	140	248	90	202	391	193	178	108	125	155	85	198	283
CME5-5	90	2.20	1"	1 1/4"	3/8"	10.5	267	178	140	248	90	202	409	211	196	126	125	155	85	198	283

1 x 200-240 V, 50/60 Hz (supply voltage U)

Pump type	Frame size	P_2 [kW]	Dimensions [mm]																		
			A1	A2	A3	A4	B1	B2	B3	H	H1	H2	L1	L2	L3	L4	L5	L6	L7	L8	L9
CME5-2	80	1.10	1"	1 1/4"	3/8"	10.5	212	158	125	233	75	149	308	112	87	85	96	137	27	196	223
CME5-3	80	1.10	1"	1 1/4"	3/8"	10.5	212	158	125	233	75	149	326	130	105	103	96	137	27	196	223
CME5-4	90	1.50	1"	1 1/4"	3/8"	10.5	212	178	140	248	90	202	351	193	178	108	125	155	85	158	243

3 x 200-240 V, 50/60 Hz (supply voltage V)

Pump type	Frame size	P_2 [kW]	Dimensions [mm]																		
			A1	A2	A3	A4	B1	B2	B3	H	H1	H2	L1	L2	L3	L4	L5	L6	L7	L8	L9
CME5-2	80	1.10	1"	1 1/4"	3/8"	10.5	267	158	125	233	75	151	348	112	87	85	96	137	27	236	263
CME5-3	80	1.10	1"	1 1/4"	3/8"	10.5	267	158	125	233	75	151	366	130	105	103	96	137	27	236	263
CME5-4	90	1.50	1"	1 1/4"	3/8"	10.5	267	178	140	248	90	202	391	193	178	108	125	155	85	198	283
CME5-5	100	2.20	1"	1 1/4"	3/8"	12.0	291	200	160	300	100	211	486	216	199	126	140	173	90	270	361

All dimensions are in mm unless otherwise stated.

CME 5-I and CME 5-G

(I = EN 1.4301/AISI 304 and G = EN 1.4401/AISI 316)

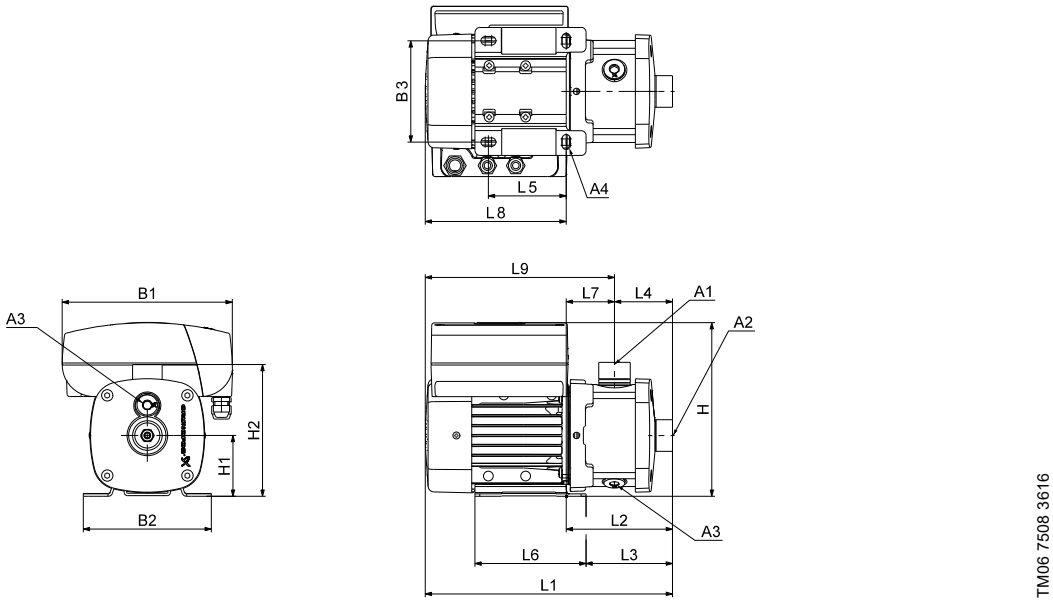

Dimensions

3 x 380-500 V, 50/60 Hz (supply voltage S)
3 x 440-480 V, 50/60 Hz (supply voltage T)

Pump type	Frame size	P_2 [kW]	Dimensions [mm]																		
			A1	A2	A3	A4	B1	B2	B3	H	H1	H2	L1	L2	L3	L4	L5	L6	L7	L8	L9
CME5-2	80	1.10	1"	1 1/4"	3/8"	10.5	212	158	125	233	75	165	368	132	107	72	96	137	60	236	296
CME5-3	80	1.10	1"	1 1/4"	3/8"	10.5	212	158	125	233	75	165	368	132	107	72	96	137	60	236	296
CME5-4	90	1.50	1"	1 1/4"	3/8"	10.5	267	178	140	248	90	181	393	195	180	90	125	155	105	198	303
CME5-5	90	2.20	1"	1 1/4"	3/8"	10.5	267	178	140	248	90	181	411	213	198	108	125	155	105	198	303
CME5-6	90	2.20	1"	1 1/4"	3/8"	10.5	267	178	140	248	90	181	447	249	234	144	125	155	105	198	303
CME5-7	100	3.00	1"	1 1/4"	3/8"	12.0	291	200	160	300	100	190	524	254	237	144	140	173	110	270	380
CME5-8	100	3.00	1"	1 1/4"	3/8"	12.0	291	200	160	300	100	190	560	290	273	180	140	173	110	270	380

1 x 200-240 V, 50/60 Hz (supply voltage U)

Pump type	Frame size	P_2 [kW]	Dimensions [mm]																		
			A1	A2	A3	A4	B1	B2	B3	H	H1	H2	L1	L2	L3	L4	L5	L6	L7	L8	L9
CME5-2	80	1.10	1"	1 1/4"	3/8"	10.5	212	158	125	233	75	165	328	132	107	72	96	137	60	196	256
CME5-3	80	1.10	1"	1 1/4"	3/8"	10.5	212	158	125	233	75	165	328	132	107	72	96	137	60	196	256
CME5-4	90	1.50	1"	1 1/4"	3/8"	10.5	212	178	140	248	90	181	353	195	180	90	125	155	105	158	263

3 x 200-240 V, 50/60 Hz (supply voltage V)

Pump type	Frame size	P_2 [kW]	Dimensions [mm]																		
			A1	A2	A3	A4	B1	B2	B3	H	H1	H2	L1	L2	L3	L4	L5	L6	L7	L8	L9
CME5-2	80	1.10	1"	1 1/4"	3/8"	10.5	267	158	125	233	75	165	368	132	107	72	96	137	60	236	296
CME5-3	80	1.10	1"	1 1/4"	3/8"	10.5	267	158	125	233	75	165	368	132	107	72	96	137	60	236	296
CME5-4	90	1.50	1"	1 1/4"	3/8"	10.5	267	178	140	248	90	181	393	195	180	90	125	155	105	198	303
CME5-5	100	2.20	1"	1 1/4"	3/8"	12.0	291	200	160	300	100	190	488	218	201	108	140	173	110	270	380
CME5-6	100	2.20	1"	1 1/4"	3/8"	12.0	291	200	160	300	100	190	524	254	237	144	140	173	110	270	380
CME5-7	100	3.00	1"	1 1/4"	3/8"	12.0	291	200	160	300	100	190	524	254	237	144	140	173	110	270	380
CME5-8	100	3.00	1"	1 1/4"	3/8"	12.0	291	200	160	300	100	190	560	290	273	180	140	173	110	270	380

All dimensions are in mm unless otherwise stated.

CME 10-A

(A = cast iron EN-GJL-200)

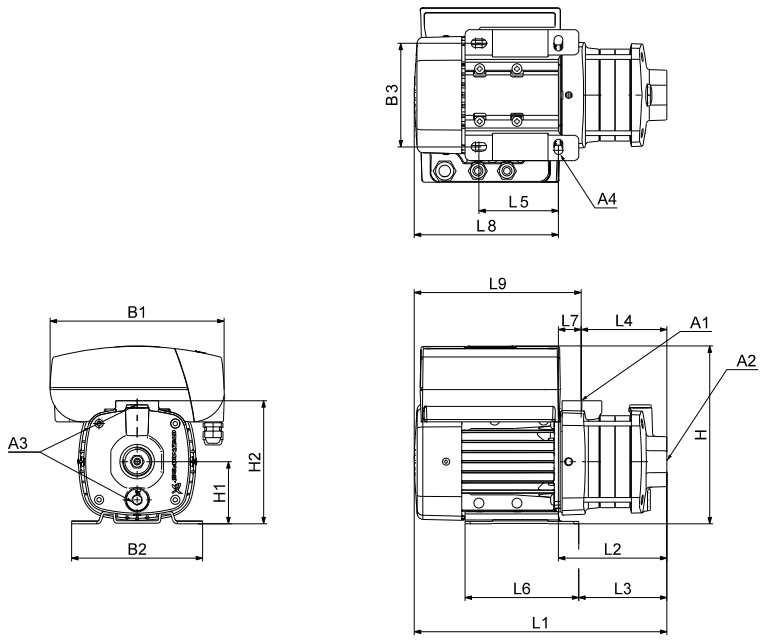

TM06 7510 3616

Dimensions

3 x 380-500 V, 50/60 Hz (supply voltage S)
3 x 440-480 V, 50/60 Hz (supply voltage T)

Pump type	Frame size	P_2 [kW]	Dimensions [mm]																		
			A1	A2	A3	A4	B1	B2	B3	H	H1	H2	L1	L2	L3	L4	L5	L6	L7	L8	L9
CME10-1	80	1.10	1 1/2"	1 1/2"	3/8"	10.5	212	158	125	258	100	242	392	155	131	97	95	137	58	236	295
CME10-2	90	2.20	1 1/2"	1 1/2"	3/8"	12.0	267	199	160	258	100	242	388	180	165	97	140	170	82	209	291
CME10-3	112	4.00	1 1/2"	1 1/2"	3/8"	12.0	291	230	190	312	112	254	496	232	212	127	140	180	105	264	369

1 x 200-240 V, 50/60 Hz (supply voltage U)

Pump type	Frame size	P_2 [kW]	Dimensions [mm]																		
			A1	A2	A3	A4	B1	B2	B3	H	H1	H2	L1	L2	L3	L4	L5	L6	L7	L8	L9
CME10-1	80	1.10	1 1/2"	1 1/2"	3/8"	10.5	212	158	125	258	100	242	352	155	131	97	95	137	58	196	255

3 x 200-240 V, 50/60 Hz (supply voltage V)

Pump type	Frame size	P_2 [kW]	Dimensions [mm]																		
			A1	A2	A3	A4	B1	B2	B3	H	H1	H2	L1	L2	L3	L4	L5	L6	L7	L8	L9
CME10-1	80	1.10	1 1/2"	1 1/2"	3/8"	10.5	267	158	125	258	100	242	392	155	131	97	95	137	58	236	295
CME10-2	100	2.20	1 1/2"	1 1/2"	3/8"	12.0	291	200	160	300	100	242	466	196	179	97	140	173	98	270	369
CME10-3	112	4.00	1 1/2"	1 1/2"	3/8"	12.0	291	230	190	312	112	254	496	232	212	127	140	180	105	264	369

All dimensions are in mm unless otherwise stated.

CME 10-I and CME 10-G

(I = EN 1.4301/AISI 304 and G = EN 1.4401/AISI 316)

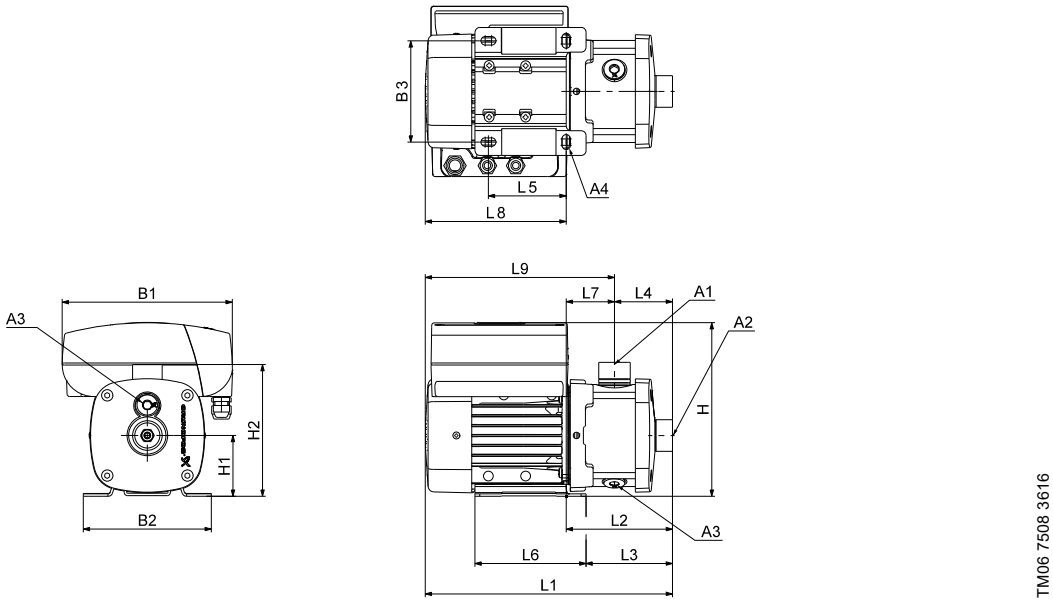

Dimensions

3 x 380-500 V, 50/60 Hz (supply voltage S)
3 x 440-480 V, 50/60 Hz (supply voltage T)

Pump type	Frame size	P_2 [kW]	Dimensions [mm]																		
			A1	A2	A3	A4	B1	B2	B3	H	H1	H2	L1	L2	L3	L4	L5	L6	L7	L8	L9
CME10-1	80	1.10	1 1/2"	1 1/2"	3/8"	10.5	212	158	125	258	100	219	422	185	161	105	95	137	80	236	317
CME10-2	90	2.20	1 1/2"	1 1/2"	3/8"	12.0	267	199	160	258	100	219	428	220	205	105	140	170	115	209	323
CME10-3	112	4.00	1 1/2"	1 1/2"	3/8"	12.0	291	230	190	312	112	230	506	242	222	105	140	180	137	264	401
CME10-4	112	5.50	1 1/2"	1 1/2"	3/8"	12.0	291	230	190	312	112	230	553	289	269	135	140	180	154	264	418
CME10-5	112	5.50	1 1/2"	1 1/2"	3/8"	12.0	291	230	190	312	112	230	613	349	329	195	140	180	154	264	418

1 x 200-240 V, 50/60 Hz (supply voltage U)

Pump type	Frame size	P_2 [kW]	Dimensions [mm]																		
			A1	A2	A3	A4	B1	B2	B3	H	H1	H2	L1	L2	L3	L4	L5	L6	L7	L8	L9
CME10-1	80	1.10	1 1/2"	1 1/2"	3/8"	10.5	212	158	125	258	100	219	382	185	161	105	95	137	80	196	277

3 x 200-240 V, 50/60 Hz (supply voltage V)

Pump type	Frame size	P_2 [kW]	Dimensions [mm]																		
			A1	A2	A3	A4	B1	B2	B3	H	H1	H2	L1	L2	L3	L4	L5	L6	L7	L8	L9
CME10-1	80	1.10	1 1/2"	1 1/2"	3/8"	10.5	267	158	125	258	100	219	422	185	161	105	95	137	80	236	317
CME10-2	100	2.20	1 1/2"	1 1/2"	3/8"	12.0	291	200	160	300	100	218	506	236	219	105	140	173	131	270	401
CME10-3	112	4.00	1 1/2"	1 1/2"	3/8"	12.0	291	230	190	312	112	230	506	242	222	105	140	180	137	264	401
CME10-4	132	5.50	1 1/2"	1 1/2"	3/8"	12.0	346	256	216	368	132	250	579	279	259	135	140	180	144	300	444
CME10-5	132	5.50	1 1/2"	1 1/2"	3/8"	12.0	346	256	216	368	132	250	639	339	319	195	140	180	144	300	444

All dimensions are in mm unless otherwise stated.

CME 15-A

(A = cast iron EN-GJL-200)

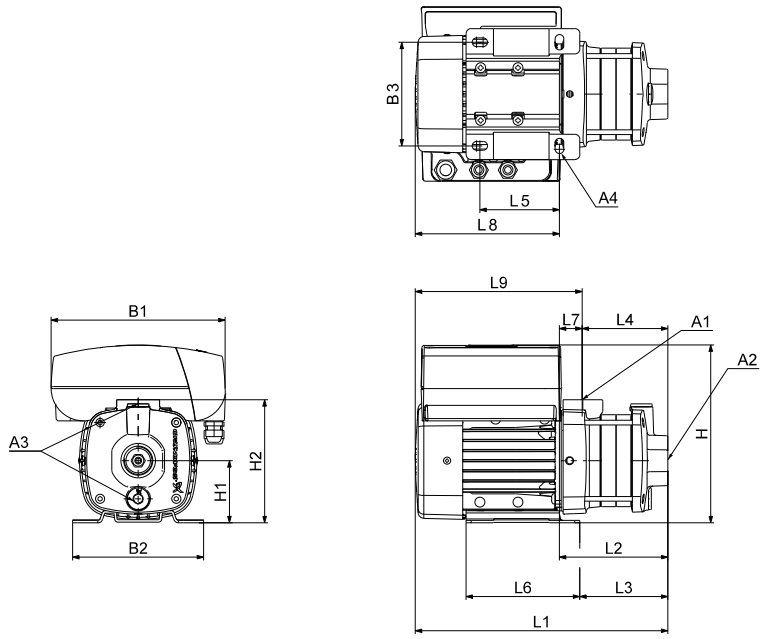

TM06 7510 3616

Dimensions

3 x 380-500 V, 50/60 Hz (supply voltage S)
3 x 440-480 V, 50/60 Hz (supply voltage T)

Pump type	Frame size	P_2 [kW]	Dimensions [mm]																		
			A1	A2	A3	A4	B1	B2	B3	H	H1	H2	L1	L2	L3	L4	L5	L6	L7	L8	L9
CME15-1	90	2.20	2"	2"	3/8"	12.0	267	199	160	258	100	242	388	180	165	97	140	170	82	209	291
CME15-2	112	4.00	2"	2"	3/8"	12.0	291	230	190	312	112	254	466	202	182	97	140	180	105	264	369
CME15-3	132	7.50	2"	2"	3/8"	12.0	346	256	216	368	132	274	539	239	219	127	140	180	112	300	412

3 x 200-240 V, 50/60 Hz (supply voltage V)

Pump type	Frame size	P_2 [kW]	Dimensions [mm]																		
			A1	A2	A3	A4	B1	B2	B3	H	H1	H2	L1	L2	L3	L4	L5	L6	L7	L8	L9
CME15-1	100	2.20	2"	2"	3/8"	12.0	291	200	160	300	100	242	466	196	179	97	140	173	98	270	369
CME15-2	112	4.00	2"	2"	3/8"	12.0	291	230	190	312	112	254	466	202	182	97	140	180	105	264	369
CME15-3	132	5.50	2"	2"	3/8"	12.0	346	256	216	368	132	274	539	239	219	127	140	180	112	300	412

All dimensions are in mm unless otherwise stated.

CME 15-I and CME 15-G

(I = EN 1.4301/AISI 304 and G = EN 1.4401/AISI 316)

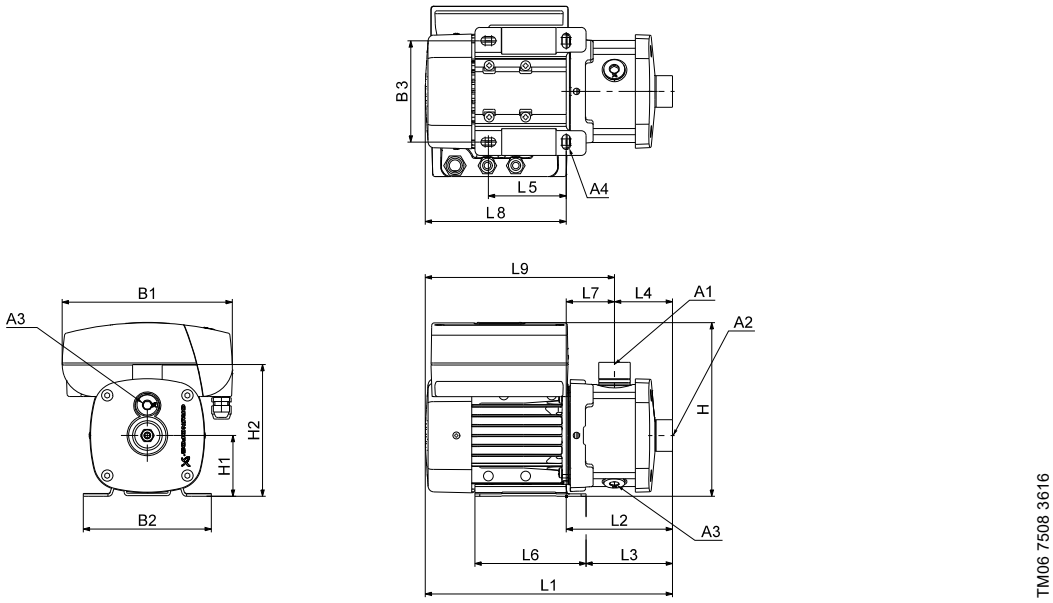

Dimensions

3 x 380-500 V, 50/60 Hz (supply voltage S)
3 x 440-480 V, 50/60 Hz (supply voltage T)

Pump type	Frame size	P_2 [kW]	Dimensions [mm]																		
			A1	A2	A3	A4	B1	B2	B3	H	H1	H2	L1	L2	L3	L4	L5	L6	L7	L8	L9
CME15-1	90	2.20	2"	2"	3/8"	12.0	267	199	160	258	100	217	428	220	205	105	140	170	115	209	323
CME15-2	112	4.00	2"	2"	3/8"	12.0	291	230	190	312	112	229	506	242	222	105	140	180	137	264	401
CME15-3	132	7.50	2"	2"	3/8"	12.0	346	256	216	368	132	249	549	249	229	105	140	180	144	300	444

3 x 200-240 V, 50/60 Hz (supply voltage V)

Pump type	Frame size	P_2 [kW]	Dimensions [mm]																		
			A1	A2	A3	A4	B1	B2	B3	H	H1	H2	L1	L2	L3	L4	L5	L6	L7	L8	L9
CME15-1	100	2.20	2"	2"	3/8"	12.0	291	200	160	300	100	217	506	236	219	105	140	173	131	270	401
CME15-2	112	4.00	2"	2"	3/8"	12.0	291	230	190	312	112	229	506	242	222	105	140	180	137	264	401
CME15-3	132	5.50	2"	2"	3/8"	12.0	346	256	216	368	132	249	549	249	229	105	140	180	144	300	444

All dimensions are in mm unless otherwise stated.

CME 25-A

(A = cast iron EN-GJL-200)

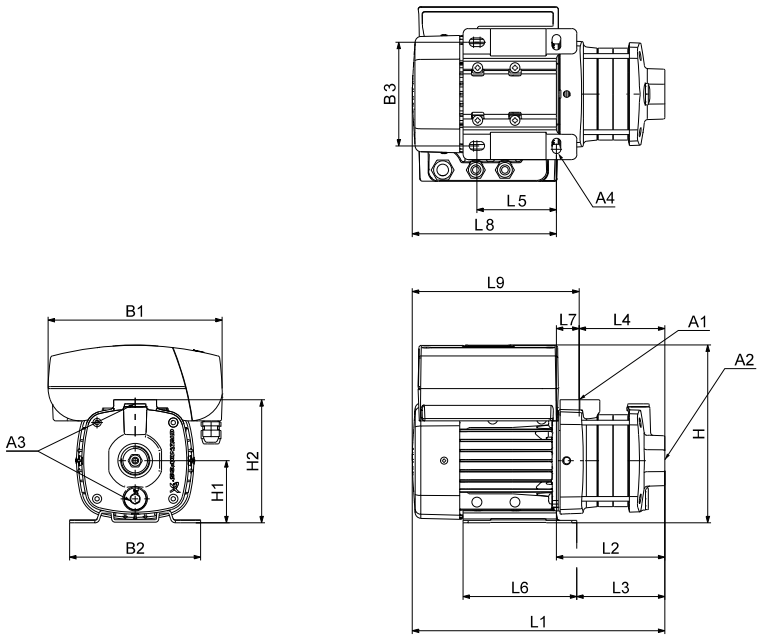

TM06 7510 3616

Dimensions

3 x 380-500 V, 50/60 Hz (supply voltage S)
3 x 440-480 V, 50/60 Hz (supply voltage T)

Pump type	Frame size	P_2 [kW]	Dimensions [mm]																		
			A1	A2	A3	A4	B1	B2	B3	H	H1	H2	L1	L2	L3	L4	L5	L6	L7	L8	L9
CME25-1	100	3.00	2"	2"	3/8"	12.0	291	200	160	300	100	242	466	196	179	97	140	173	98	270	369
CME25-2	132	7.50	2"	2"	3/8"	12.0	346	256	216	368	132	274	509	209	189	97	140	180	112	300	412

3 x 200-240 V, 50/60 Hz (supply voltage V)

Pump type	Frame size	P_2 [kW]	Dimensions [mm]																		
			A1	A2	A3	A4	B1	B2	B3	H	H1	H2	L1	L2	L3	L4	L5	L6	L7	L8	L9
CME25-1	100A	3.00	2"	2"	3/8"	12.0	291	200	160	300	100	242	466	196	179	97	140	173	98	270	369
CME25-2	132F	5.50	2"	2"	3/8"	12.0	346	256	216	368	132	274	509	209	189	97	140	180	112	300	412

All dimensions are in mm unless otherwise stated.

CME 25-I and CME 25-G

(I = EN 1.4301/AISI 304 and G = EN 1.4401/AISI 316)

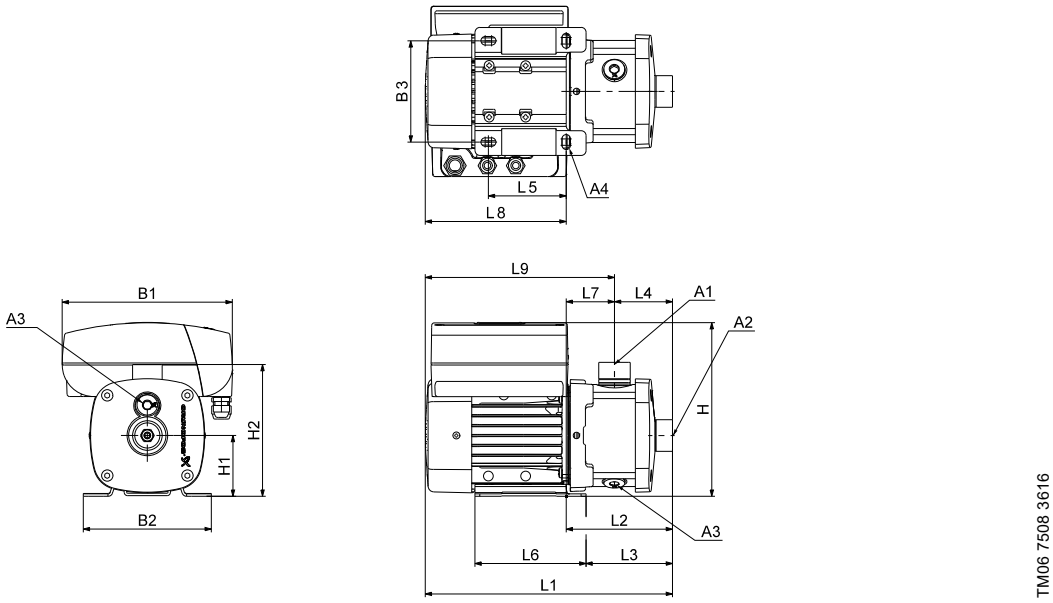

Dimensions

3 x 380-500 V, 50/60 Hz (supply voltage S)
3 x 440-480 V, 50/60 Hz (supply voltage T)

Pump type	Frame size	P_2 [kW]	Dimensions [mm]																		
			A1	A2	A3	A4	B1	B2	B3	H	H1	H2	L1	L2	L3	L4	L5	L6	L7	L8	L9
CME25-1	100	3.00	2"	2"	3/8"	12.0	291	200	160	300	100	217	506	235	219	105	140	173	130	270	401
CME25-2	132	7.50	2"	2"	3/8"	12.0	346	256	216	368	132	249	549	249	229	105	140	180	144	300	444

3 x 200-240 V, 50/60 Hz (supply voltage V)

Pump type	Frame size	P_2 [kW]	Dimensions [mm]																		
			A1	A2	A3	A4	B1	B2	B3	H	H1	H2	L1	L2	L3	L4	L5	L6	L7	L8	L9
CME25-1	100	3.00	2"	2"	3/8"	12.0	291	200	160	300	100	217	506	236	219	105	140	173	131	270	401
CME25-2	132	5.50	2"	2"	3/8"	12.0	346	256	216	368	132	249	549	249	229	105	140	180	144	300	444

All dimensions are in mm unless otherwise stated.

26. Weights and shipping volume

All weights and volumes refer to pumps with standard pipe connections.

Overview

Pump type	Material variant	Pages
CM non-self-priming	Cast iron	115
	Stainless steel	118
CM self-priming	Stainless steel	122
CME non-self-priming	Cast iron	122
	Stainless steel	124

CM non-self-priming pumps

Cast iron (A = cast iron EN-GJL-200)

CM non-self-priming pumps Cast iron (A = cast iron EN-GJL-200)	Pump type	Net weight [kg]	Gross weight [kg]	Shipping volume [m^3]
1 x 220 V, 60 Hz (supply voltage A)	CM 1-2	11.71	14.21	0.02
	CM 1-3	11.98	14.48	0.02
	CM 1-4	12.25	14.75	0.02
	CM 1-5	12.53	15.03	0.02
	CM 3-2	11.71	14.21	0.02
	CM 3-3	11.98	14.48	0.02
	CM 3-4	13.65	16.15	0.03
	CM 3-5	15.03	17.52	0.03
	CM 5-2	13.01	15.51	0.02
	CM 5-3	14.38	16.88	0.02
	CM 5-4	24.22	26.72	0.04
	CM 10-1	23.40	25.90	0.04
1 x 115/230 V, 60 Hz (supply voltage B, B1) 1 x 230 V, 60 Hz (supply voltage B2) * Values for supply voltage B2	CM 1-2	11.71	14.21	0.02
	CM 1-3	11.98	14.48	0.02
	CM 1-4	12.25	14.75	0.02
	CM 1-5	12.53	15.03	0.02
	CM 3-2	11.71	14.21	0.02
	CM 3-3	11.98	14.48	0.02
	CM 3-4	13.65	16.15	0.03
	CM 3-5	15.03	17.52	0.04
	CM 5-2	13.01	15.51	0.02
	CM 5-3	14.38	16.88	0.04
	CM 5-4	24.22	26.72	0.04
	CM 5-5	24.50	27.00	0.04
	CM 10-1	23.40/22.20*	25.90/24.70*	0.08

CM non-self-priming pumps Cast iron (A = cast iron EN-GJL-200)	Pump type	Net weight [kg]	Gross weight [kg]	Shipping volume [m^3]
1 x 220-240 V, 50 Hz (supply voltage C)	CM 1-2	11.01	13.51	0.02
	CM 1-3	11.28	13.78	0.02
	CM 1-4	12.25	14.75	0.02
	CM 1-5	12.53	15.03	0.02
	CM 1-6	12.79	15.29	0.03
	CM 1-7	13.07	15.57	0.03
	CM 1-8	14.73	17.23	0.03
	CM 3-2	11.01	13.51	0.02
	CM 3-3	11.98	14.48	0.02
	CM 3-4	12.25	14.75	0.02
	CM 3-5	12.53	15.03	0.02
	CM 3-6	14.19	16.69	0.03
	CM 3-7	15.57	18.07	0.03
	CM 3-8	15.84	18.34	0.03
	CM 5-2	11.61	14.11	0.02
	CM 5-3	11.88	14.38	0.02
	CM 5-4	13.55	16.05	0.03
	CM 5-5	14.93	17.43	0.03
	CM 5-6	22.66	25.16	0.04
	CM 5-7	22.94	25.44	0.04
	CM 5-8	23.21	25.71	0.04
	CM 10-1	22.2	24.7	0.04
	CM 10-2	29.84	32.34	0.04
	CM 10-3	32.65	35.15	0.04
	CM 15-1	28.54	31.04	0.04
	CM 15-2	31.28	33.78	0.04
	CM 25-1	30.64	33.14	0.04
3 x 220-240/380-415 V, 50 Hz (supply voltage F)	CM 1-2	11.01	13.51	0.02
	CM 1-3	11.28	13.78	0.02
	CM 1-4	11.55	14.05	0.02
	CM 1-5	11.82	14.32	0.02
	CM 1-6	12.09	14.59	0.03
	CM 1-7	13.07	15.57	0.03
	CM 1-8	13.34	15.84	0.03
	CM 3-2	11.01	13.51	0.02
	CM 3-3	11.28	13.78	0.02
	CM 3-4	11.55	14.05	0.02
	CM 3-5	12.53	15.03	0.02
	CM 3-6	12.79	15.29	0.03
	CM 3-7	16.17	18.67	0.03
	CM 3-8	16.43	18.93	0.04
	CM 5-2	10.91	13.41	0.02
	CM 5-3	11.88	14.38	0.02
	CM 5-4	15.25	17.75	0.03
	CM 5-5	15.53	18.03	0.03
	CM 5-6	23.27	25.77	0.04
	CM 5-7	23.55	26.05	0.04
	CM 5-8	27.61	30.11	0.05
	CM 10-1	20.90	23.40	0.04
	CM 10-2	30.48	32.98	0.04
	CM 10-3	35.00	37.50	0.04
	CM 10-4	37.32	39.82	0.05
	CM 10-5	38.01	40.51	0.05
	CM 15-1	22.54	25.04	0.04
	CM 15-2	33.63	36.13	0.04
	CM 15-3	48.16	50.66	0.05
	CM 15-4	55.85	58.35	0.08
	CM 25-1	32.98	35.48	0.04
	CM 25-2	47.45	49.95	0.04
	CM 25-3	55.16	57.66	0.05
	CM 25-4	54.77	57.27	0.08

CM non-self-priming pumps Cast iron (A = cast iron EN-GJL-200)	Pump type	Net weight [kg]	Gross weight [kg]	Shipping volume [m^3]
3 x 200/346 V, 50 Hz; 3 x 200-220/346-380 V, 60 Hz (supply voltage G)	CM 1-2	11.01	13.51	0.02
	CM 1-3	11.28	13.78	0.02
	CM 1-4	12.25	14.75	0.02
	CM 1-5	12.53	15.03	0.02
	CM 3-2	11.01	13.51	0.02
	CM 3-3	11.98	14.48	0.02
	CM 3-4	12.25	14.75	0.02
	CM 3-5	16.02	18.52	0.03
	CM 5-2	11.61	14.11	0.02
	CM 5-3	15.38	17.88	0.03
	CM 5-4	26.36	28.86	0.04
	CM 5-5	26.63	29.13	0.04
	CM 10-1	24.40	26.90	0.04
	CM 10-2	34.13	36.63	0.04
	CM 10-3	52.12	54.62	0.05
	CM 15-1	32.83	35.33	0.04
	CM 15-2	50.75	53.25	0.04
	CM 15-3	54.76	57.26	0.05
	CM 25-1	50.11	52.61	0.04
	CM 25-2	54.05	56.55	0.04
3 x 208-230/440-480 V, 60 Hz (supply voltage E, E1) 3 x 380-415 V, 50 Hz; 3 x 440-480 V, 60 Hz (supply voltage J) 3 x 220-240/380-415 V, 50 Hz; 3 x 220-255/380-440 V, 60 Hz (supply voltage O) * Values for supply voltage O	CM 1-2	11.01 / 11.71*	13.51 / 14.21*	0.02
	CM 1-3	11.28 / 11.98*	13.78 / 14.48*	0.02
	CM 1-4	12.25	14.75	0.02
	CM 1-5	12.53	15.03	0.02
	CM 3-2	11.01 / 11.71*	13.51 / 14.21*	0.02
	CM 3-3	11.98	14.48	0.02
	CM 3-4	12.25	14.75	0.02
	CM 3-5	15.53 / 15.63*	18.02 / 18.13*	0.03
	CM 5-2	11.61	14.11	0.02
	CM 5-3	14.88 / 14.98*	17.38 / 17.48*	0.03
	CM 5-4	26.53	29.03	0.04
	CM 5-5	26.80	29.3	0.04
	CM 10-1	23.10 / 23.20*	25.60 / 25.70*	0.04
	CM 10-2	34.29 / 34.30*	36.79 / 36.80*	0.04
	CM 10-3	52.12 / 56.02*	54.62 / 58.52*	0.05
	CM 15-1	32.99 / 33.00*	35.49 / 35.5*	0.04
	CM 15-2	50.75 / 54.65*	53.25 / 57.15*	0.04
	CM 15-3	54.76	57.26	0.05
	CM 25-1	50.11 / 54.01*	52.61	0.04
	CM 25-2	54.05	56.55	0.04
3 x 575 V, 60 Hz (supply voltage H)	CM 1-4	14.75	17.25	0.03
	CM 1-5	15.03	17.52	0.03
	CM 3-3	14.48	16.98	0.03
	CM 3-4	14.75	17.25	0.03
	CM 3-5	15.03	17.52	0.03
	CM 5-2	14.11	16.61	0.03
	CM 5-3	14.38	16.88	0.03
	CM 5-4	23.88	26.38	0.03
	CM 5-5	26.17	28.67	0.04
	CM 10-1	24.30	26.80	0.04
	CM 10-2	40.32	42.82	0.04
	CM 10-3	52.12	54.62	0.05
	CM 10-5	52.12	54.62	0.08
	CM 15-1	32.35	34.85	0.04
	CM 15-2	50.75	53.25	0.04
	CM 15-3	54.76	57.26	0.08
	CM 25-1	50.11	52.61	0.04
	CM 25-2	54.05	56.55	0.08

CM non-self-priming pumps

Stainless steel (I = EN 1.4301/AISI 304 and G = EN 1.4401/AISI 316)

CM non-self-priming pumps Stainless steel (I = EN 1.4301/AISI 304 and G = EN 1.4401/AISI 316)	Pump type	Net weight [kg]	Gross weight [kg]	Shipping volume [m^3]
1 x 220 V, 60 Hz (supply voltage A)	CM 1-2	12.34	14.84	0.02
	CM 1-3	12.42	14.92	0.02
	CM 1-4	12.75	15.25	0.02
	CM 1-5	13.10	15.60	0.02
	CM 1-6	15.09	17.59	0.03
	CM 1-7	16.27	18.77	0.03
	CM 1-8	16.87	19.37	0.04
	CM 1-9	16.95	19.45	0.04
	CM 3-2	12.34	14.84	0.02
	CM 3-3	12.42	14.92	0.02
	CM 3-4	14.15	16.65	0.03
	CM 3-5	15.60	18.10	0.03
	CM 3-6	23.92	26.42	0.04
	CM 3-7	24.00	26.50	0.04
	CM 3-8	24.60	27.10	0.04
	CM 5-2	13.71	16.21	0.03
	CM 5-3	14.89	17.39	0.03
	CM 5-4	22.95	25.45	0.04
	CM 10-1	18.79	21.29	0.04
1 x 115/230 V, 60 Hz (supply voltage B, B1) 1 x 230 V, 60 Hz (supply voltage B2) * Values for supply voltage B2	CM 1-2	12.34	14.84	0.02
	CM 1-3	12.42	14.92	0.02
	CM 1-4	12.75	15.25	0.02
	CM 1-5	13.10	15.60	0.02
	CM 1-6	15.09	17.59	0.03
	CM 1-7	16.27	18.77	0.04
	CM 1-8	16.87	19.37	0.04
	CM 1-9	16.95	19.45	0.04
	CM 3-2	12.34	14.84	0.02
	CM 3-3	12.42	14.92	0.02
	CM 3-4	14.15	16.65	0.03
	CM 3-5	15.60	18.10	0.04
	CM 3-6	23.92	26.42	0.04
	CM 3-7	24.00	26.50	0.04
	CM 3-8	24.60	27.10	0.04
	CM 5-2	13.71	16.21	0.03
	CM 5-3	14.89	17.39	0.04
	CM 5-4	22.95	25.45	0.04
	CM 5-5	23.30	25.80	0.04
	CM 10-1	18.79/17.59*	21.29/20.09*	0.04
1 x 220-240 V, 50 Hz (supply voltage C)	CM 1-2	11.64	14.14	0.02
	CM 1-3	11.72	14.22	0.02
	CM 1-4	12.75	15.25	0.02
	CM 1-5	13.10	15.60	0.02
	CM 1-6	13.69	16.19	0.03
	CM 1-7	13.77	16.27	0.03
	CM 1-8	15.77	18.27	0.04
	CM 1-9	15.85	18.35	0.04
	CM 1-10	16.47	18.97	0.04
	CM 1-11	17.64	20.14	0.04
	CM 1-12	18.51	21.01	0.05
	CM 1-13	18.58	21.08	0.05
	CM 1-14	24.29	26.79	0.08

CM non-self-priming pumps Stainless steel (I = EN 1.4301/AISI 304 and G = EN 1.4401/AISI 316)	Pump type	Net weight [kg]	Gross weight [kg]	Shipping volume [m^3]
1 x 220-240 V, 50 Hz (supply voltage C)	CM 3-2	11.64	14.14	0.02
	CM 3-3	12.42	14.92	0.02
	CM 3-4	12.75	15.25	0.02
	CM 3-5	13.10	15.60	0.02
	CM 3-6	15.09	17.59	0.03
	CM 3-7	16.27	18.77	0.03
	CM 3-8	16.87	19.37	0.04
	CM 3-9	22.58	25.08	0.04
	CM 3-10	23.20	25.70	0.05
	CM 3-11	23.27	25.77	0.05
	CM 3-12	24.14	26.64	0.08
	CM 3-13	24.21	26.71	0.08
	CM 3-14	26.39	28.89	0.08
	CM 5-2	12.31	14.81	0.02
	CM 5-3	12.39	14.89	0.02
	CM 5-4	14.12	16.62	0.03
	CM 5-5	15.57	18.07	0.03
	CM 5-6	21.8	24.30	0.04
	CM 5-7	21.88	24.38	0.04
	CM 5-8	22.48	24.98	0.04
	CM 5-9	24.66	27.16	0.04
	CM 5-10	25.27	27.77	0.05
	CM 5-11	25.34	27.84	0.05
	CM 10-1	17.59	20.09	0.04
	CM 10-2	24.79	27.29	0.04
	CM 10-3	27.10	29.60	0.04
	CM 15-1	24.48	26.98	0.04
	CM 15-2	26.78	29.28	0.04
	CM 25-1	26.58	29.08	0.04
3 x 220-240/380-415 V, 50 Hz (supply voltage F)	CM 1-2	11.64	14.14	0.02
	CM 1-3	11.72	14.22	0.02
	CM 1-4	12.05	14.55	0.02
	CM 1-5	12.40	14.90	0.02
	CM 1-6	12.99	15.49	0.03
	CM 1-7	13.77	16.27	0.03
	CM 1-8	14.37	16.87	0.03
	CM 1-9	14.45	16.95	0.03
	CM 1-10	18.57	21.07	0.04
	CM 1-11	18.64	21.14	0.04
	CM 1-12	19.51	22.01	0.05
	CM 1-13	19.58	22.08	0.05
	CM 1-14	19.66	22.16	0.05
	CM 3-2	11.64	14.14	0.02
	CM 3-3	11.72	14.22	0.02
	CM 3-4	12.05	14.55	0.02
	CM 3-5	13.10	15.60	0.02
	CM 3-6	13.69	16.19	0.03
	CM 3-7	17.27	19.77	0.03
	CM 3-8	17.87	20.37	0.04
	CM 3-9	17.95	20.45	0.04
	CM 3-10	23.80	26.30	0.05
	CM 3-11	23.87	26.37	0.05
	CM 3-12	24.74	27.24	0.08
	CM 3-13	28.61	31.11	0.08
	CM 3-14	28.69	31.19	0.08
	CM 5-2	11.61	14.11	0.02
	CM 5-3	12.39	14.89	0.02
	CM 5-4	16.22	18.72	0.00
	CM 5-5	16.57	19.07	0.03
	CM 5-6	22.40	24.90	0.04
	CM 5-7	22.48	24.98	0.04
	CM 5-8	26.88	29.38	0.05
	CM 5-9	26.96	29.46	0.05
	CM 5-10	27.58	30.08	0.05
	CM 5-11	27.65	30.15	0.05
	CM 5-12	31.69	34.19	0.08
	CM 5-13	31.76	34.26	0.08
	CM 10-1	16.29	18.79	0.04

CM non-self-priming pumps Stainless steel (I = EN 1.4301/AISI 304 and G = EN 1.4401/AISI 316)	Pump type	Net weight [kg]	Gross weight [kg]	Shipping volume [m^3]
3 x 220-240/380-415 V, 50 Hz (supply voltage F)	CM 10-2	25.43	27.93	0.00
	CM 10-3	29.45	31.95	0.00
	CM 10-4	31.93	34.43	0.00
	CM 10-5	33.32	35.82	0.08
	CM 10-6	45.66	48.16	0.08
	CM 10-7	54.15	56.65	0.08
	CM 10-8	54.35	56.85	0.08
	CM 15-1	18.48	20.98	0.04
	CM 15-2	29.13	31.63	0.04
	CM 15-3	43.17	45.67	0.05
	CM 15-4	51.01	53.51	0.08
	CM 25-1	28.93	31.43	0.04
	CM 25-2	42.96	45.46	0.05
	CM 25-3	50.17	52.67	0.05
	CM 25-4	49.94	52.44	0.08
3 x 200/346 V, 50 Hz; 3 x 200-220/346-380 V, 60 Hz (supply voltage G)	CM 1-2	11.64	14.14	0.02
	CM 1-3	11.72	14.22	0.02
	CM 1-4	12.75	15.25	0.02
	CM 1-5	13.10	15.60	0.02
	CM 1-6	13.69	16.19	0.03
	CM 1-7	13.77	16.27	0.03
	CM 1-8	17.87	20.37	0.04
	CM 1-9	17.95	20.45	0.04
	CM 3-2	11.64	14.14	0.02
	CM 3-3	12.42	14.92	0.02
	CM 3-4	12.75	15.25	0.02
	CM 3-5	16.60	19.10	0.03
	CM 3-6	17.19	19.69	0.03
	CM 3-7	26.14	28.64	0.04
	CM 3-8	26.74	29.24	0.05
	CM 3-9	26.82	29.32	0.05
	CM 5-2	12.31	14.81	0.02
	CM 5-3	15.89	18.39	0.03
	CM 5-4	25.09	27.59	0.04
	CM 5-5	25.44	27.94	0.04
	CM 5-6	26.03	28.53	0.04
	CM 5-7	29.46	31.96	0.05
	CM 5-8	30.06	32.56	0.05
	CM 10-1	19.79	22.29	0.04
	CM 10-2	29.09	31.59	0.04
	CM 10-3	46.58	49.08	0.05
	CM 10-4	51.12	53.62	0.05
	CM 10-5	52.52	55.02	0.08
	CM 15-1	28.78	31.28	0.04
	CM 15-2	46.26	48.76	0.05
	CM 15-3	49.77	52.27	0.05
	CM 25-1	46.06	48.56	0.05
	CM 25-2	49.56	52.06	0.05

CM non-self-priming pumps Stainless steel (I = EN 1.4301/AISI 304 and G = EN 1.4401/AISI 316)	Pump type	Net weight [kg]	Gross weight [kg]	Shipping volume [m^3]
3 x 208-230/440-480 V, 60 Hz (supply voltage E, E1) 3 x 380-415 V, 50 Hz; 3 x 440-480 V, 60 Hz (supply voltage J) 3 x 220-240/380-415 V, 50 Hz; 3 x 220-255/380-440 V, 60 Hz (supply voltage O)	CM 1-2	12.34	14.84	0.02
	CM 1-3	12.42	14.92	0.02
	CM 1-4	12.75	15.25	0.02
	CM 1-5	13.10	15.60	0.02
	CM 1-6	13.69	16.19	0.03
	CM 1-7	13.77	16.27	0.03
	CM 1-8	17.87	20.37	0.04
	CM 1-9	17.95	20.45	0.04
	CM 3-2	12.34	14.84	0.02
	CM 3-3	12.42	14.92	0.02
	CM 3-4	12.75	15.25	0.02
	CM 3-5	16.60	19.10	0.03
	CM 3-6	26.23	28.73	0.04
	CM 3-7	26.31	28.81	0.04
	CM 3-8	26.91	29.41	0.05
	CM 3-9	26.99	29.49	0.05
	CM 5-2	12.31	14.81	0.02
	CM 5-3	15.89	18.39	0.03
	CM 5-4	25.26	27.76	0.04
	CM 5-5	25.61	28.11	0.04
	CM 5-6	26.20	28.70	0.04
	CM 5-7	29.46	31.96	0.05
	CM 5-8	30.06	32.56	0.05
	CM 10-1	18.59	21.09	0.04
	CM 10-2	29.25	31.75	0.04
	CM 10-3	50.48	52.98	0.05
	CM 10-4	51.12	53.62	0.05
	CM 10-5	52.52	55.02	0.08
	CM 15-1	28.94	31.44	0.04
	CM 15-2	50.16	52.66	0.05
	CM 15-3	49.77	52.27	0.05
	CM 25-1	49.96	52.46	0.05
	CM 25-2	49.56	52.06	0.05
3 x 575 V, 60 Hz (supply voltage H)	CM 1-4	16.15	18.65	0.03
	CM 1-5	16.50	19.00	0.03
	CM 1-6	17.09	19.59	0.03
	CM 1-7	17.17	19.67	0.03
	CM 1-8	17.77	20.27	0.04
	CM 1-9	24.34	26.84	0.04
	CM 3-3	15.82	18.32	0.03
	CM 3-4	16.15	18.65	0.03
	CM 3-5	16.50	19.00	0.03
	CM 3-6	23.58	26.08	0.04
	CM 3-7	25.68	28.18	0.04
	CM 3-8	26.27	28.77	0.05
	CM 3-9	26.35	28.85	0.05
	CM 5-2	15.71	18.21	0.03
	CM 5-3	15.79	18.29	0.03
	CM 5-4	22.61	25.11	0.03
	CM 5-5	24.97	27.47	0.04
	CM 5-6	25.57	28.07	0.04
	CM 5-7	32.36	34.86	0.05
	CM 5-8	32.96	35.46	0.05
	CM 10-1	19.69	22.19	0.04
	CM 10-2	35.27	37.77	0.04
	CM 10-3	46.58	49.08	0.05
	CM 10-4	47.42	49.92	0.05
	CM 15-1	28.30	30.80	0.04
	CM 15-2	46.26	48.76	0.05
	CM 15-3	49.77	52.27	0.08
	CM 25-1	46.06	48.56	0.05
	CM 25-2	49.56	52.06	0.08

CM self-priming pumps

Stainless steel (I = EN 1.4301/AISI 304)

CM self-priming pumps Stainless steel (I = EN 1.4301/AISI 304)	Pump type	Net weight [kg]	Gross weight [kg]	Shipping volume [m^3]
1 x 220 V, 60 Hz (supply voltage A)	CM 1-3	13.86	16.36	0.03
	CM 1-4	14.02	16.52	0.03
	CM 3-3	13.86	16.36	0.03
	CM 3-4	15.42	17.92	0.03
	CM 5-3	16.33	18.83	0.03
	CM 5-4	24.22	26.72	0.04
1 x 220-240 V, 50 Hz (supply voltage C)	CM 1-3	13.15	15.65	0.03
	CM 1-4	14.02	16.52	0.03
	CM 1-5	14.53	17.03	0.03
	CM 1-6	14.81	17.31	0.03
	CM 3-3	13.86	16.36	0.03
	CM 3-4	14.02	16.52	0.03
	CM 3-5	14.53	17.03	0.03
	CM 3-6	16.21	18.71	0.04
	CM 5-3	13.83	16.33	0.03
	CM 5-4	15.39	17.89	0.03
	CM 5-5	17.01	19.51	0.04
	CM 5-6	22.92	25.42	0.04
	CM 5-7	23.33	25.83	0.05

CME non-self-priming pumps

Cast iron (A = cast iron EN-GJL-200)

CME non-self-priming pumps Cast iron (A = cast iron EN-GJL-200)	Pump type	Net weight [kg]	Gross weight [kg]	Shipping volume [m^3]
3 x 380-500 V, 50/60 Hz (supply voltage S) 3 x 440-480 V, 50/60 Hz (supply voltage T)	CME 1-2	15.47	18.97	0.04
	CME 1-3	15.75	19.25	0.04
	CME 1-4	16.02	19.52	0.04
	CME 1-5	17.10	20.60	0.04
	CME 3-2	15.47	18.97	0.04
	CME 3-3	16.56	20.06	0.04
	CME 3-4	16.82	20.32	0.04
	CME 3-5	17.10	20.60	0.04
	CME 5-2	16.18	19.68	0.04
	CME 5-3	16.46	19.96	0.04
	CME 5-4	19.93	21.66	0.04
	CME 5-5	19.36	21.24	0.05
	CME 10-1	25.31	27.04	0.04
	CME 10-2	28.96	30.69	0.04
	CME 10-3	41.31	44.81	0.08
	CME 15-1	27.65	29.38	0.04
	CME 15-2	39.94	43.44	0.08
	CME 15-3	53.51	57.27	0.21
	CME 25-1	36.06	39.56	0.08
	CME 25-2	52.81	56.56	0.21
1 x 200-240 V, 50/60 Hz (supply voltage U)	CME 1-2	13.65	17.15	0.03
	CME 1-3	13.93	17.43	0.04
	CME 1-4	14.19	17.69	0.04
	CME 1-5	15.32	18.82	0.04
	CME 3-2	13.65	17.15	0.03
	CME 3-3	14.77	18.27	0.04
	CME 3-4	15.04	18.54	0.04
	CME 3-5	15.32	18.82	0.04
	CME 5-2	14.40	17.90	0.03
	CME 5-3	14.67	18.17	0.04
	CME 5-4	18.19	21.69	0.04
	CME 10-1	23.52	25.25	0.04

CME non-self-priming pumps Cast iron (A = cast iron EN-GJL-200)	Pump type	Net weight [kg]	Gross weight [kg]	Shipping volume [m^3]
3 x 200-240 V, 50/60 Hz (supply voltage V)	CME 1-5	16.98	18.86	0.05
	CME 3-3	16.43	18.16	0.04
	CME 3-4	16.70	18.43	0.04
	CME 3-5	16.98	18.86	0.05
	CME 5-2	16.06	17.79	0.04
	CME 5-3	16.33	18.06	0.04
	CME 5-4	20.45	22.18	0.04
	CME 5-5	27.34	30.84	0.08
	CME 10-1	25.18	26.91	0.04
	CME 10-2	34.74	38.24	0.08
	CME 10-3	38.81	42.31	0.08
	CME 15-1	33.44	36.94	0.08
	CME 15-2	37.44	40.94	0.08
	CME 15-3	52.57	56.33	0.21
	CME 25-1	33.52	37.02	0.08
	CME 25-2	51.87	55.63	0.21

CME non-self-priming pumps

Stainless steel (I = EN 1.4301/AISI 304 and G = EN 1.4401/AISI 316)

CME non-self-priming pumps Stainless steel (I = EN 1.4301/AISI 304 and G = EN 1.4401/AISI 316)	Pump type	Net weight [kg]	Gross weight [kg]	Shipping volume [m^3]
3 x 380-500 V, 50/60 Hz (supply voltage S) 3 x 440-480 V, 50/60 Hz (supply voltage T)	CME 1-2	16.11	19.61	0.04
	CME 1-3	16.19	19.69	0.04
	CME 1-4	16.52	20.02	0.04
	CME 1-5	17.67	21.17	0.04
	CME 1-6	18.27	21.77	0.04
	CME 1-7	18.35	21.85	0.04
	CME 1-8	18.95	22.45	0.04
	CME 1-9	20.39	22.27	0.05
	CME 3-2	16.11	19.61	0.04
	CME 3-3	17.00	20.50	0.04
	CME 3-4	17.32	20.82	0.04
	CME 3-5	17.67	21.17	0.04
	CME 3-6	19.63	21.51	0.05
	CME 3-7	19.71	21.59	0.05
	CME 3-8	21.71	23.59	0.05
	CME 3-9	21.79	23.67	0.05
	CME 5-2	16.89	20.39	0.04
	CME 5-3	16.97	20.47	0.04
	CME 5-4	18.66	20.39	0.04
	CME 5-5	20.40	22.28	0.05
	CME 5-6	21.00	22.88	0.05
	CME 5-7	29.30	32.80	0.08
	CME 5-8	29.89	33.39	0.08
	CME 10-1	20.70	22.58	0.05
	CME 10-2	23.91	25.79	0.05
	CME 10-3	35.76	39.26	0.08
	CME 10-4	45.88	49.38	0.08
	CME 10-5	47.28	50.78	0.08
	CME 15-1	23.60	25.48	0.05
	CME 15-2	35.44	38.94	0.08
	CME 15-3	48.52	52.28	0.21
	CME 25-1	32.00	35.50	0.08
	CME 25-2	48.31	52.07	0.21
1 x 200-240 V, 50/60 Hz (supply voltage U)	CME 1-2	14.29	17.79	0.04
	CME 1-3	14.37	17.86	0.04
	CME 1-4	14.69	18.19	0.04
	CME 1-5	15.89	19.39	0.04
	CME 1-6	16.49	19.99	0.04
	CME 1-7	16.57	20.07	0.04
	CME 1-8	17.17	20.67	0.04
	CME 1-9	18.65	22.15	0.04
	CME 3-2	14.29	17.79	0.04
	CME 3-3	15.21	18.71	0.04
	CME 3-4	15.54	19.04	0.04
	CME 3-5	15.89	19.39	0.04
	CME 3-6	17.89	21.39	0.04
	CME 3-7	17.97	21.47	0.04
	CME 5-2	15.11	18.61	0.04
	CME 5-3	15.19	18.69	0.04
	CME 5-4	16.91	20.41	0.04
	CME 10-1	18.92	20.65	0.04

CME non-self-priming pumps Stainless steel (I = EN 1.4301/AISI 304 and G = EN 1.4401/AISI 316)	Pump type	Net weight [kg]	Gross weight [kg]	Shipping volume [m^3]
3 x 200-240 V, 50/60 Hz (supply voltage V)	CME 1-5	20.67	22.55	0.05
	CME 1-6	21.27	23.15	0.05
	CME 1-7	21.35	23.23	0.05
	CME 1-8	21.95	23.83	0.05
	CME 1-9	20.91	22.79	0.05
	CME 3-3	20.00	21.73	0.04
	CME 3-4	20.32	22.06	0.04
	CME 3-5	20.67	22.55	0.05
	CME 3-6	20.15	22.03	0.05
	CME 3-7	20.23	22.11	0.05
	CME 3-8	27.44	30.94	0.08
	CME 3-9	27.52	31.02	0.08
	CME 5-2	19.89	21.62	0.04
	CME 5-3	19.97	21.70	0.04
	CME 5-4	19.17	20.90	0.04
	CME 5-5	26.14	29.64	0.08
	CME 5-6	26.74	30.24	0.08
	CME 5-7	26.90	30.40	0.08
	CME 5-8	27.49	30.99	0.08
	CME 10-1	20.57	22.45	0.05
	CME 10-2	29.69	33.19	0.08
	CME 10-3	33.26	36.76	0.08
	CME 10-4	48.53	52.30	0.21
	CME 10-5	49.93	53.69	0.21
	CME 15-1	29.38	32.88	0.08
	CME 15-2	32.94	36.44	0.08
	CME 15-3	47.58	51.34	0.21
	CME 25-1	29.46	32.96	0.08
	CME 25-2	47.37	51.13	0.21

27. Electrical data

Mains-operated motors, 50 Hz

1 x 220-240 V, 50 Hz (supply voltage C)

Frame size	P_2 [kW]	$I_{1/1}$ [A]	Cos $\varphi_{1/1}$	η [%]	I_{start} [A]	Speed [min^{-1}]
71A	0.3	1.8 / 2.4	0.95 - 0.86	67.4 - 61.4	6.1 - 8.2	2.800 - 2.830
71B	0.5	3.1 / 2.8	0.97 - 0.99	74 - 70	16.4 - 14.8	2.730 - 2.740
80A	0.67	4.4 / 4.0	0.99 - 0.99	71.8 - 73	17.2 - 15.6	2.720 - 2.800
80B	0.9	5.4 / 5.0	0.98 - 0.98	76 - 74	23.2 - 21.5	2.750 - 2.790
90SA	1.3	8.4 / 8.0	0.98 - 0.98	71 - 71	28.6 - 27.2	2.710 - 2.710
90SB	1.7	11.2 / 10.0	0.99 - 0.98	72.5 - 73.5	41.4 - 37.0	2.740 - 2.755

3 x 220-240/380-415 V, 50 Hz (supply voltage F)

Frame size	P_2 [kW]	$I_{1/1}$ [A]	Cos $\varphi_{1/1}$	η [%]	I_{start} [A]	Speed [min^{-1}]
71A	0.46	2.0 - 2.2 / 1.0 - 1.2	0.83 - 0.75	73.4 - 73.6	9.8 - 11.7 / 4.9 - 6.4	2.770 - 2.820
71B	0.65	2.8 - 3.1 / 1.6 - 1.8	0.82 - 0.72	73.9 - 72.9	16.2 - 19.2 / 9.3 - 11.2	2.770 - 2.820
80C	1.1	4.4 - 4.5 / 2.55 - 2.6	0.82 - 0.74	83.1 - 83.4	31.7 - 35.1 / 18.4 - 20.3	2.830 - 2.860
90SD	1.50	5.70 - 5.70 / 3.30 - 3.30	0.84 - 0.78	84.2 - 84.2	40.5 - 45.0 / 23.4 - 26.1	2.890 - 2.910
90LE	2.20	8.00 - 8.00 / 4.60 - 4.60	0.86 - 0.80	85.9 - 85.9	67.2 - 73.6 / 38.6 - 42.3	2.890 - 2.910
100LC	3.0	11.0 - 11.0 / 6.30 - 6.30	0.87 - 0.82	87.2 - 87.1	92.4 - 101.2 / 52.9 - 58.0	2.900 - 2.920
112MC	4.0	13.8 - 13.2 / 8.00 - 7.65	0.89 - 0.86	89.2 - 89.2	154.6 - 162.4 / 89.6 - 94.1	2.920 - 2.940
132SC	5.5	19.0 - 19.0 / 11.0 - 11.0	0.87 - 0.82	89.9 - 90.2	212.8 - 243.2 / 123.2 - 140.8	2.920 - 2.940
132SB	7.5	25.0 - 24.2 / 14.4 - 14.0	0.88 - 0.82	90.1 - 90.4	195.0 - 220.2 / 112.3 - 127.4	2.910 - 2.920

Mains-operated motors, 60 Hz

1 x 220 V, 60 Hz (supply voltage A)

Frame size	P_2		Service factor	$I_{1/1}$ [A]	Service factor current	Cos $\varphi_{1/1}$	η [%]	I_{start} [A]	Speed [min^{-1}]
	[kW]	[hp]							
71B	0.60	0.80	1	4.1	1	0.98	71	16.8	3.300
80A	0.84	1.1	1	5.8	1	0.98	69.8	18.6	3.150
80B	1.14	1.5	1	7.35	1	0.99	73.5	19.8	3.270
90SB	1.54	2.0	1	9.8	1	0.98	74.8	37.2	3.330

1 x 115/230 V, 60 Hz (supply voltage B, B1)

Frame size	P_2		Service factor	$I_{1/1}$ [A]	Service factor current	Cos $\varphi_{1/1}$	η [%]	I_{start} [A]	Speed [min^{-1}]
	[kW]	[hp]							
71BA	0.60	0.8	1	7.6 / 3.9	7.6 / 3.9	0.76	69	19.8 / 10.1	3.240
80AA	0.78	1.06	1	10.6 / 5.4	10.6 / 5.4	0.65	69	31.8 / 16.2	3.240
80BA	1.10	1.50	1	14.6 / 7.3	14.6 / 7.3	0.94	71	46.7 / 23.4	3.320
90CC	1.50	2.03	1	18.8 / 9.8	18.8 / 9.8	0.97	72.9	75.2 / 39.2	3.360

1 x 230 V, 60 Hz (supply voltage B2)

Frame size	P_2		Service factor	$I_{1/1}$ [A]	Service factor current	Cos $\varphi_{1/1}$	η [%]	I_{start} [A]	Speed [min^{-1}]
	[kW]	[hp]							
71BA	0.60	0.8	1	3.9	3.9	0.76	66	10.1	3.240
80AA	0.78	1.06	1	5.4	5.4	0.65	68	16.2	3.240
80BA	1.10	1.50	1	7.3	7.3	0.94	69	23.4	3.320
90CC	1.50	2.03	1	9.8	9.8	0.97	69	39.2	3.360

3 x 208-230/440-480 V, 60 Hz (supply voltage E, E1)

Frame size	P_2 [kW]	P_2 [hp]	Service factor	$I_{1/1}$ [A]	Service factor current	Cos $\varphi_{1/1}$	η [%]	I_{start} [A]	Speed [min^{-1}]
71AA	0.43	0.58	1	1.9 - 1.7 / 1.0 - 0.8	1.9 - 1.7 / 1.0 - 0.8	0.85 - 0.81 / 0.85 - 0.81	76.0 - 78.6	11.2 - 11.1 / 5.9 - 5.2	3.360 - 3.420
71BA	0.74	1.0	1	3.4 - 3.6 / 1.7 - 1.8	3.4 - 3.6 / 1.7 - 1.8	0.89 - 0.83 / 0.89 - 0.83	76.0 - 78.4	20.1 - 23.4 / 10.0 - 11.7	3.220 - 3.370
80CB	1.1	1.47	1	5.2 - 5.1 / 2.55 - 2.65	5.2 - 5.1 / 2.55 - 2.65	0.81 - 0.73 / 0.81 - 0.73	84.8 - 84.7	35.4 - 39.3 / 17.3 - 20.4	3.430 - 3.470
90HA	2.20	2.95	1	8.50 - 8.20 / 4.10 - 4.25	8.50 - 8.20 / 4.10 - 4.25	0.85 - 0.82	86.5 - 86.5	79.05 - 80.36 / 40.18 - 41.65	3.500 - 3.520
100DA	2.9	3.9	1	10.8 - 10.5 / 5.25 - 5.3	10.8 - 10.5 / 5.25 - 5.3	0.85 - 0.78 / 0.85 - 0.78	88.0 - 88.2	129.6 - 91.4 / 63.0 - 46.1	3.520 - 3.530
112CA	4.0	5.36	1	14.6 - 13.6 / 6.95 - 6.65	14.6 - 13.6 / 6.95 - 6.65	0.9 - 0.86 / 0.9 - 0.86	88.6 - 88.5	131.4 - 156.4 / 62.6 - 76.5	3.530 - 3.540
132DA	5.5	7.37	1	20.4 - 19.8 / 9.95 - 9.85	20.4 - 19.8 / 9.95 - 9.85	0.84 - 0.78 / 0.84 - 0.78	90.1 - 90.0	259.1 - 277.2 / 126.4 - 137.9	3.540 - 3.550
132EB	6.4	8.57	1	23.6 - 22.8 / 11.6 - 11.6	23.6 - 22.8 / 11.6 - 11.6	0.84 - 0.78 / 0.84 - 0.78	90.1 - 89.9	144.0 - 143.6 / 70.8 - 73.1	3.530 - 3.550

3 x 575 V, 60 Hz (supply voltage H)

Frame size	P_2 [kW]	P_2 [hp]	Service factor	$I_{1/1}$ [A]	Service factor current	Cos $\varphi_{1/1}$	η [%]	I_{start} [A]	Speed [min^{-1}]
71AA	0.43	0.58	1	0.7	1	0.84	-	4.55	3.340
80CB	1.10	1.50	1	1.72	1	0.78	-	12.6	3.450
90CD	1.50	2.00	1	2.20	1	0.82	-	21.1	3.530
90HA	2.20	2.95	1	3.25	1	0.83	-	25.4	3.510
100BB	3.0	4.0	1	4.25	1	0.83	-	63.8	3.540
112CA	4.0	5.5	1	5.35	1	0.84	-	99.2	3.550
132DA	5.5	7.5	1	7.55	1	0.81	-	116.3	3.550
132FA	7.5	10	1	9.5	1	0.87	-	90.3	3.530

Mains-operated motors, 50/60 Hz

3 x 220-240/380-415 V, 50 Hz; 3 x 220-255/380-440 V, 60 Hz (supply voltage O)

Frame size	P_2 [kW]	Frequency [Hz]	$I_{1/1}$ [A]	Cos $\varphi_{1/1}$	η [%]	I_{start} [A]	Speed [min^{-1}]
71B	0.43	50	2.3 - 2.6 / 1.3 - 1.5	0.72 - 0.60	78 - 76	11.5 - 15.6 / 6.5 - 9.0	2.870 - 2.890
	0.74	60	3.1 - 2.75 / 1.78 - 1.58	0.87 - 0.84	75 - 77	15.5 - 16.5 / 8.9 - 9.5	3.280 - 3.350
80C	0.64	50	3.75 - 4.75 / 2.16 - 2.75	0.56 - 0.43	83.1 - 78.6	36.0 - 42.8 / 20.7 - 24.8	2.920 - 2.930
	1.1	60	4.30 - 4.25 / 2.48 - 2.44	0.83 - 0.72	84.6 - 85.4	28.4 - 33.2 / 16.4 - 19.0	3.420 - 3.470
90HA	1.27	50	5.60 - 6.25 / 3.30 - 3.60	0.70 - 0.59	83.5 - 83.5	61.6 - 71.9 / 36.3 - 41.4	2.960 - 2.970
	2.2	60	7.70 - 7.20 / 4.45 - 4.15	0.90 - 0.84	86.5 - 86.5	57.8 - 67.0 / 33.4 - 38.6	3.470 - 3.500
100LC	1.68	50	7.0 - 7.90 / 4.05 - 4.55	0.73 - 0.62	88.1 - 86.2	98.0 - 110.6 / 56.7 - 63.7	2.950 - 2.960
	2.90	60	10.2 - 9.10 / 5.85 - 5.25	0.90 - 0.85	86.9 - 88.5	88.7 - 88.3 / 50.9 - 50.9	3.490 - 3.520
112MC	2.3	50	9.95 - 10.6 / 5.75 - 6.1	0.73 - 0.63	88.4 - 86.7	159.2 - 173.8 / 92.0 - 100.0	2.970 - 2.970
	4	60	14.0 - 12.8 / 8.05 - 7.35	0.89 - 0.84	89.1 - 89.7	147.0 - 169.0 / 84.5 - 97.0	3.520 - 3.540
132SC	3.18	50	12.4 - 13.0 / 7.20 - 7.45	0.78 - 0.69	90.0 - 89.2	213.3 - 236.6 / 123.8 - 135.6	2.960 - 2.960
	5.5	60	19.0 - 16.8 / 11.0 - 9.75	0.91 - 0.86	89.5 - 90.4	201.4 - 231.0 / 116.6 - 134.1	3.510 - 3.530
132SD	3.7	50	16.4 - 18.4 / 9.45 - 10.6	0.69 - 0.57	89.6 - 87.8	272.2 - 311.0 / 156.9 - 179.1	2.960 - 2.970
	6.4	60	22.2 - 20.4 / 12.8 - 11.8	0.89 - 0.82	90.0 - 90.2	217.6 - 265.2 / 125.4 - 153.4	3.510 - 3.540

3 x 380-415 V, 50 Hz; 3 x 440-480 V, 60 Hz (supply voltage J)

Frame size	P_2 [kW]	Frequency [Hz]	$I_{1/1}$ [A]	Cos $\varphi_{1/1}$	η [%]	I_{start} [A]	Speed [min^{-1}]
71AA	0.25	50	0.55 - 0.65	0.77 - 0.71	77 - 76	4.0 - 5.1	2.870 - 2.890
	0.43	60	0.95 - 0.80	0.85 - 0.82	76.0 - 78.6	5.6 - 5.2	3.360 - 3.420
71BA	0.43	50	1.4 - 1.5	0.76 - 0.66	77 - 76	7.7 - 9.0	2.860 - 2.890
	0.74	60	1.7 - 1.8	0.89 - 0.83	76.0 - 78.4	10.0 - 11.7	3.220 - 3.380
80CB	0.64	50	1.82 - 1.98	0.67 - 0.56	84.2 - 83.1	16.9 - 19.2	2.910 - 2.920
	1.10	60	2.22 - 2.22	0.8 - 0.72	84.9 - 85.4	16.7 - 19.3	3.440 - 3.470
90HA	1.27	50	3.30 - 3.60	0.70 - 0.59	83.5 - 83.5	36.3 - 41.4	2.960 - 2.970
	2.2	60	4.15 - 4.00	0.84 - 0.80	86.5 - 86.5	38.6 - 42.0	3.500 - 3.530
100DA	1.68	50	4.05 - 4.60	0.73 - 0.62	88.1 - 86.2	48.6 - 62.1	2.950 - 2.960
	2.9	60	5.25 - 5.3	0.85 - 0.79	88.5 - 88.2	63.0 - 46.1	3.520 - 3.540
112CA	2.3	50	5.2 - 5.1	0.8 - 0.74	86.4 - 88.8	80.6 - 78.3	2.960 - 2.970
	4.0	60	6.95 - 6.65	0.88 - 0.84	88.7 - 88.5	84.1 - 89.1	3.540 - 3.550
132DA	3.18	50	7.2 - 7.45	0.78 - 0.69	90.0 - 89.2	123.8 - 135.6	2.960 - 2.960
	5.5	60	9.7 - 9.45	0.86 - 0.82	90.4 - 90.4	133.4 - 145.5	3.530 - 3.550
132EB	3.7	50	9.45 - 10.6	0.69 - 0.57	89.6 - 87.8	156.9 - 179.1	2.960 - 2.970
	6.4	60	11.8 - 12.0	0.82 - 0.74	90.6 - 90.2	153.4 - 174.0	3.540 - 3.550

3 x 200/346 V, 50 Hz; 3 x 200-220/346-380 V, 60 Hz (supply voltage G)

Frame size	P_2 [kW]	Frequency [Hz]	$I_{1/1}$ [A]	Cos $\varphi_{1/1}$	η [%]	I_{start} [A]	Speed [min^{-1}]
71AA	0.25	50	1.6 / 1.0	0.65	77	11.7 / 7.3	2.900
	0.43	60	2.0 - 1.8 / 1.15 - 1.05	0.85 - 0.8	76.0 - 78.6	11.8 - 11.7 / 6.8 - 6.8	3.370 - 3.424
71B	0.43	50	3.6 / 2.0	0.53	77	19.8 / 11.0	2.904
	0.74	60	3.3 - 3.5 / 2.0 - 2.2	0.83 - 0.76	76 - 78.4	19.5 - 22.8 / 11.8 - 14.3	3.380 - 3.429
80C	0.74	50	5.95 / 3.45	0.46	78.1	37.5 / 21.7	2.920
	1.28	60	5.5 - 5.65 / 3.15 - 3.25	0.80 - 0.71	84.4 - 84.3	34.4 - 37.9 / 19.7 - 21.8	3.410 - 3.450
90LE	1.27	50	6.75 / 3.90	0.62	83.5	77.6 / 44.9	2.960
	2.2	60	8.60 - 8.00 / 5.00 - 4.60	0.89 - 0.84	86.5 - 86.5	66.2 - 72.8 / 38.5 - 41.9	3.490 - 3.510
100LC	1.68	50	7.45 / 4.30	0.73	88.1	59.6 / 34.4	2.950
	2.90	60	10.8 - 10.4 / 6.25 - 6.0	0.91 - 0.87	86.9 - 88.1	81.0 - 96.7 / 46.9 - 55.8	3.490 - 3.510
112MC	2.3	50	10.2 / 5.9	0.77	87.3	157.1 / 90.9	2.960
	4	60	14.6 - 13.6 / 8.45 - 7.85	0.90 - 0.87	88.6 - 89.1	135.8 - 148.9 / 78.6 - 86.0	3.520 - 3.540
132SC	3.18	50	13.6 / 7.85	0.78	90.0	152.3 / 87.9	2.960
	5.5	60	21.0 - 20.0 / 12.1 - 11.6	0.91 - 0.88	89.5 - 90.1	214.2 - 296.0 / 123.4 - 171.7	3.510 - 3.520
132SD	3.7	50	20.0 / 11.6	0.63	88.8	240.0 / 139.2	2.970
	6.4	60	24.6 - 23.6 / 14.2 - 13.8	0.87 - 0.82	90.1 - 90.6	270.6 - 290.3 / 156.2 - 169.7	3.520 - 3.520

Speed-controlled motors

3 x 380-500 V, 50/60 Hz (supply voltage S)

Frame size	P_2		Service factor	$I_{1/1}$ [A]	Service factor current [A]	Cos $\varphi_{1/1}$
	[kW]	[hp]				
71A	0.55	0.75	-	1.35 - 1.30	-	0.77 - 0.61
80B	1.10	1.50	-	2.20 - 1.90	-	0.89 - 0.79
90C	1.50	2.00	-	2.90 - 2.40	-	0.92 - 0.85
90D	2.20	3.00	-	4.15 - 3.40	-	0.93 - 0.87
100A	3.00	4.00	-	5.80 - 4.80	-	0.91 - 0.86
112C	4.00	5.00	-	7.60 - 6.20	-	0.92 - 0.87
112E	5.50	7.50	-	10.3 - 8.20	-	0.92 - 0.88
132F	7.50	10.0	-	14.10 - 11.20	-	0.93 - 0.89

3 x 440-480 V, 50/60 Hz (supply voltage T)

Frame size	P_2		Service factor	$I_{1/1}$ [A]	Service factor current [A]	Cos $\varphi_{1/1}$
	[kW]	[hp]				
71A	0.55	0.75	1.25	1.35	1.70	0.68
80B	1.10	1.50	1.15	2.05	2.40	0.84
90C	1.50	2.00	1.15	2.65	3.00	0.87
90D	2.20	3.00	1.15	3.80	4.30	0.89
112C	3.70	5.00	1.15	6.20 - 5.80	7.00 - 6.60	0.90 - 0.88
112E	5.50	7.50	1.15	9.10 - 8.50	10.4 - 9.70	0.91 - 0.89
132F	7.50	10.00	1.15	12.40 - 11.50	14.20 - 13.00	0.91 - 0.90

1 x 200-240 V, 50/60 Hz (supply voltage U)

Frame size	P_2		Service factor	$I_{1/1}$ [A]	Service factor current [A]	Cos $\varphi_{1/1}$
	[kW]	[hp]				
71A	0.55	0.75	-	3.45 - 2.90	-	0.98
80B	1.10	1.50	-	6.70 - 5.60	-	0.99
90C	1.50	2.00	-	9.10 - 7.60	-	0.99

3 x 200-240 V, 50/60 Hz (supply voltage V)

Frame size	P_2		Service factor	$I_{1/1}$ [A]	Service factor current [A]	Cos $\varphi_{1/1}$
	[kW]	[hp]				
80B	1.10	1.50	-	4.10 - 3.50	-	0.92
90C	1.50	2.00	-	5.40 - 4.60	-	0.92
100A	2.20	3.00	-	7.80 - 6.50	-	0.94
100A	3.00	4.00	-	10.50 - 8.80	-	0.94
112C	4.00	5.00	-	14.10 - 11.80	-	0.94
132F	5.50	7.50	-	19.60 - 16.30	-	0.94

Additional data for speed-controlled motors

Single-phase supply voltage

1 x 200-240 V, 50/60 Hz (supply voltage U).

Recommended fuse size

Motor size [kW]	Min. [A]	Max. [A]
0.12 - 0.75	6	10
1.1 - 1.5	10	16

You can use standard as well as quick-blow or slow-blow fuses.

Leakage current

Earth leakage current less than 3.5 mA, AC.

Earth leakage current less than 10 mA, DC.

The leakage currents are measured in accordance with EN 61800-5-1:2007.

Three-phase supply voltage

3 x 380-500 V, 50/60 Hz (supply voltage S)

3 x 440-480 V, 50/60 Hz (supply voltage T)

Recommended fuse size

Motor size [kW]	Min. [A]	Max. [A]
0.12 - 1.1	6	6
1.5	6	10
2.2	6	16
3	10	16
4	13	16
5.5	16	32
7.5	20	32
11	32	32

You can use standard as well as quick-blow or slow-blow fuses.

Leakage current, AC

Speed [min^{-1}]	Power [kW]	Mains voltage [V]	Leakage current [mA]
2900-4000	0.25 - 2.2	≤ 400	< 3.5
		> 400	< 5
	3 - 5.5	≤ 400	< 3.5
		> 400	< 3.5
	7.5 - 11	≤ 400	< 3.5
		> 400	< 5
4000-5900	0.25 - 2.2	≤ 400	< 3.5
		> 400	< 5
	3 - 5.5	≤ 400	< 3.5
		> 400	< 3.5
	7.5 - 11	≤ 400	< 3.5
		> 400	< 5

The leakage currents are measured in accordance with EN 61800-5-1:2007.

Inputs and outputs

Earth reference, GND

All voltages refer to GND.

All currents return to GND.

Absolute maximum voltage and current limits

Exceeding the following electrical limits may result in severely reduced operating reliability and motor life:

Relay 1:

Maximum contact load: 250 VAC, 2 A or 30 VDC, 2 A.

Relay 2:

Maximum contact load: 30 VDC, 2 A.

GENI terminals: -5.5 to +9.0 VDC or less than 25 mADC.

Other input or output terminals: -0.5 to +26 VDC or less than 15 mADC.

Digital inputs, DI

Internal pull-up current greater than 10 mA at V_i equal to 0 VDC.

Internal pull-up to 5 VDC (currentless for V_i greater than 5 VDC).

Low logic level: V_i less than 1.5 VDC.

High logic level: V_i greater than 3.0 VDC.

Hysteresis: No.

Screened cable: 0.5 - 1.5 mm^2, 28-16 AWG.

Maximum cable length: 500 m.

Open-collector digital outputs, OC

Current sinking capability: 75 mADC, no current sourcing.

Load types: Resistive or/and inductive.

Low-state output voltage at 75 mADC: Maximum 1.2 VDC.

Low-state output voltage at 10 mADC: Maximum 0.6 VDC.

Overcurrent protection: Yes.

Screened cable: 0.5 - 1.5 mm^2, 28-16 AWG.

Maximum cable length: 500 m.

Analog inputs, AI

Voltage signal ranges:

- 0.5 - 3.5 VDC, AL AU.
- 0-5 VDC, AU.
- 0-10 VDC, AU.

Voltage signal: R_i greater than 100 kΩ at 25 °C.

Leak currents may occur at high operating temperatures. Keep the source impedance low.

Current signal ranges:

- 0-20 mADC, AU.
- 4-20 mADC, AL AU.

Current signal: R_i equal to 292 Ω.

Current overload protection: Yes. Change to voltage signal.

Measurement tolerance: 0/+ 3 % of full scale (maximum-point coverage).

Screened cable: 0.5 - 1.5 mm^2, 28-16 AWG.

Maximum cable length: 500 m (excl. potentiometer).

Potentiometer connected to +5 V, GND, any AI:

Use maximum 10 kΩ.

Maximum cable length: 100 m.

Analog output, AO

Current sourcing capability only.

Voltage signal:

- Range: 0-10 VDC.
- Minimum load between AO and GND: 1 kΩ.
- Short-circuit protection: Yes.

Current signal:

- Ranges: 0-20 and 4-20 mADC.
- Maximum load between AO and GND: 500 Ω.
- Open-circuit protection: Yes.

Tolerance: 0/+ 4 % of full scale (maximum-point coverage).

Screened cable: 0.5 - 1.5 mm^2, 28-16 AWG.

Maximum cable length: 500 m.

Pt100/1000 inputs, PT

Temperature range:

- Minimum -30 °C. 88 Ω / 882 Ω.
- Maximum 180 °C. 168 Ω / 1685 Ω.

Measurement tolerance: ± 1.5 °C.

Measurement resolution: < 0.3 °C.

Automatic range detection. Pt100 or Pt1000: Yes.

Sensor fault alarm: Yes.

Screened cable: 0.5 - 1.5 mm^2, 28-16 AWG.

Use Pt100 for short wires.

Use Pt1000 for long wires.

LiqTec sensor inputs*

Use Grundfos LiqTec sensor only.

Screened cable: 0.5 - 1.5 mm^2, 28-16 AWG.

Grundfos Digital Sensor input and output, GDS*

Use Grundfos Digital Sensor only.

* Only applicable for TPE, TPED Series 2000 and TPE3, TPE3 D pumps.

Power supplies

+5 V:

- Output voltage: 5 VDC - 5 %/+ 5 %.
- Maximum current: 50 mADC, sourcing only.
- Overload protection: Yes.

+24 V:

- Output voltage: 24 VDC - 5 %/+ 5 %.
- Maximum current: 60 mADC, sourcing only.
- Overload protection: Yes.

Digital outputs, relays

Potential-free changeover contacts.

Minimum contact load when in use: 5 VDC, 10 mA.

Screened cable: 0.5 - 2.5 mm^2, 28-12 AWG.

Maximum cable length: 500 m.

Bus input

Grundfos GENIbus protocol, RS-485.

Screened 3-core cable: 0.5 - 1.5 mm^2, 28-16 AWG.

Maximum cable length: 500 m.

EMC (electromagnetic compatibility)

Standard used: EN 61800-3.

The table below indicates the emission category of the motor.

C1: Fulfils the requirements for residential areas.

C3: Fulfils the requirements for industrial areas.

Motor [kW]	Emission category	
	1450-2000 min^{-1}	2900-4000 min^{-1} 4000-5900 min^{-1}
0.25	C1	C1
0.37	C1	C1
0.55	C1	C1
0.75	C1	C1
1.1	C1	C1
1.5	C1	C1
2.2	C1	C1
3	C1	C1
4	C1	C1
5.5	C3/C1*	C1
7.5	C3/C1*	C3/C1*
11	-	C3/C1*

* C1, if equipped with an external Grundfos EMC filter.

Immunity: Fulfils the requirements for industrial areas.

Contact Grundfos for further information.

Enclosure class

Standard: IP55 (IEC 34-5).

Insulation class

F (IEC 85).

Standby power consumption

5-10 W.

Cable entries

Motor [kW]	Number and size of cable entries	
	2900-4000 min^{-1}	4000-5900 min^{-1}
0.25 - 1.5	4 x M20	4 x M20
2.2	4 x M20	4 x M20
3-4	1 x M25 + 4 x M20	1 x M25 + 4 x M20
5.5	1 x M25 + 4 x M20	1 x M25 + 4 x M20
7.5 - 11	1 x M32 + 5 x M20	1 x M32 + 5 x M20

Cable glands delivered with the pump

Motor [kW]	Quantity	Thread size	Cable diameter [mm]
0.25 - 2.2	2	M20 x 1.5	5
	1		7-14
3 - 5.5	4	M20 x 1.5	5
	1	M25 x 1.5	9-18
7.5 - 11	4	M20 x 1.5	5
	1	M32 x 1.5	14-25

Torques

Terminal	Thread size	Maximum torque [Nm]
L1, L2, L3, L, N	M4	1.8
NC, C1, C2, NO	M2.5	0.5
1-26 and A, Y, B	M2	0.5

Sound pressure level

Motor [kW]	Maximum speed stated on nameplate [min^{-1}]	Speed [min^{-1}]	Sound pressure level ISO 3743 [dB(A)]	
			1-phase motors	3-phase motors
0.25 - 0.75	2000	1500	38	38
		2000	42	42
	4000	3000	53	53
		4000	58	58
	5900	4000	58	58
		5900	68	68
1.1	2000	1500		38
		2000		42
	4000	3000	53	53
		4000	58	58
	5900	4000	58	58
		5900	68	68
1.5	2000	1500		39
		2000		46
	4000	3000	57	57
		4000	64	64
	5900	4000	58	58
		5900	68	68
2.2	2000	1500		47
		2000		
	4000	3000		57
		4000		64
	5900	4000		58
		5900		68
3	2000	1500		48
		2000		54
	4000	3000		59
		4000		67
	5900	4000		63
		5900		73
4	2000	1500		48
		2000		55
	4000	3000		60
		4000		67
	5900	4000		63
		5900		73
5.5	2000	1500		54
		2000		60
	4000	3000		60
		4000		68
	5900	4000		63
		5900		73
7.5	2000	1500		55
		2000		61
	4000	3000		64
		4000		72
	5900	4000		68
		5900		79
11	4000	3000		65
		4000		73
	5900	4000		69
		5900		79

The grey fields indicate that the motor is not available in this MGE motor range.

28. Customisation

Although the Grundfos CM and CME product range offers a number of pumps for different applications, customers require specific pump solutions to satisfy their needs. Below are the options available for customising the CM and CME pumps.

Contact Grundfos for further information or for requests other than the ones mentioned below.

Motors

Motor with multiplug connection

Mains-operated motors fitted with a Harting® 10-pin multiplug connection, HAN 10 ES, enable easy connection to the mains.

Note that for CME pumps we offer the solutions shown on page 134.

The purpose of a multiplug connection is to facilitate the electrical installation and service of the pump. The multiplug functions as a plug-and-pump device.

Figure 40 shows the position of the multiplug on the mains-operated motor.

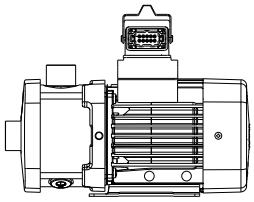

TM04 5846 4109

Fig. 40 Motor with a multiplug connection

TM02 0470 0700

Fig. 41 Multiplug logo

Dimensions

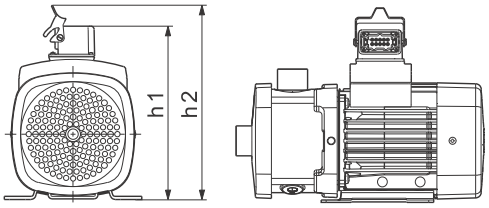

TM04 5847 4609

Pump type	Frame size	h1	h2
CM 1 CM 3 CM 5	71	206	237
	80	206	237
	90	263	294
	100	283	314
CM 10 CM 15 CM 25	71	231	262
	80	231	262
	90	273	304
	100	283	314
	112	309	340
	132	309	340

Plug connections

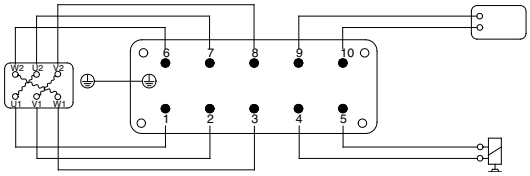

TM01 8702 0700

Fig. 42 Plug connection from motor

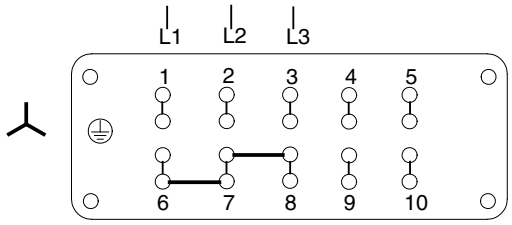

TM01 8703 0700

Fig. 43 Plug connection for star connection

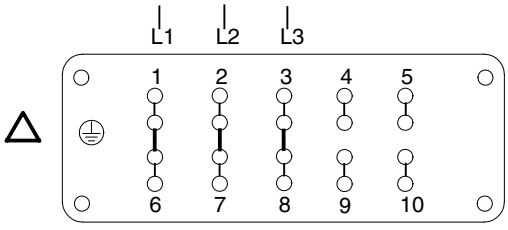

TM01 8704 0700

Fig. 44 Plug connection for delta connection

Note that wire bridges for connections are located in the plug.

Plug-and-pump solution for CME pumps

To facilitate electrical installation and service, we offer plug-and-pump solutions for CME pumps. These customised solutions are only available on request. Please contact Grundfos.

CME pumps can be fitted with receptacles in the cable entries of the motor for fast cable connection. Simply plug and pump.

Figure 45 shows how the CME pumps are connected.

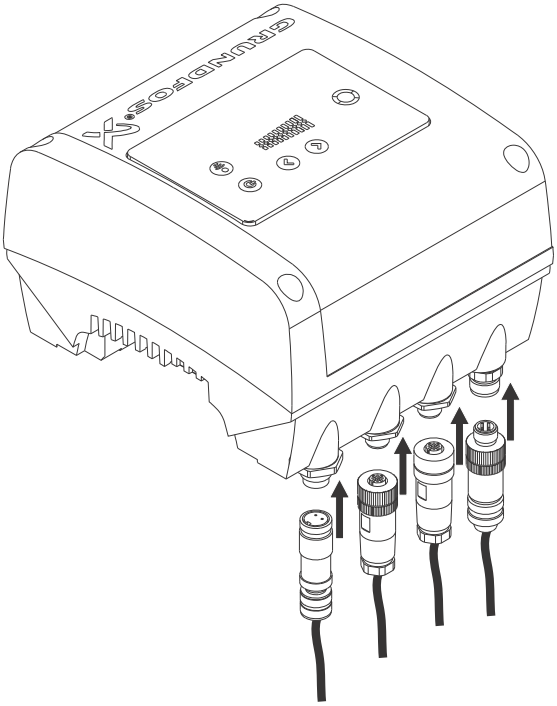

TM05 7677 1413

Fig. 45 Fast connection of CME pumps

Motor with anti-condensation heater

CM

TM03 2440 4305

Fig. 46 Mains-operated motor with an anti-condensation heater

In applications where condensation in the motor may occur, we recommend that you install a motor with an anti-condensation heater on the stator coil ends. The heater keeps the motor temperature higher than the ambient temperature and prevents condensation.

In areas with ambient temperatures below 0 °C, we recommend that you always use motors with an anti-condensation heater.

High humidity may cause condensation in the motor. Slow condensation occurs as a result of a decreasing ambient temperature; rapid condensation occurs as a result of shock cooling caused by direct sunlight followed by rain.

Note that rapid condensation is not to be confused with the phenomenon which occurs when the pressure inside the motor is lower than the atmospheric pressure. In such cases, moisture is sucked from the atmosphere into the motor through bearings, housings, etc.

In applications with constant humidity levels above 85 %, the drain holes in the drive-end flange must be open. This changes the enclosure class to IPX5. If IP55 protection is required due to operation in dusty environments, we recommend that you install a motor with an anti-condensation heater.

Figure 47 shows a typical circuit of a three-phase motor with an anti-condensation heater.

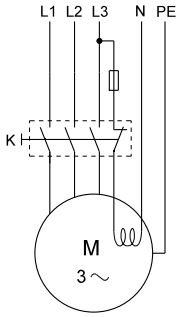

TM03 4058 1406

Fig. 47 Three-phase motor with an anti-condensation heater

Legend

Symbol	Designation
K	Contactor
M	Motor

Note that you must connect the anti-condensation heater to the power supply so that it is on when the motor is switched off.

The following motor sizes are available with an anti-condensation heater:

Motors, 50/60 Hz	Power of heating unit [W]	
Frame size	1 x 24 V	1 x 190-250 V
71/80	38	23
90		31
100		38
112/132	2 x 38	2 x 38

CME

The MGE motors fitted to CME pumps incorporate a standstill heating function. No external heater on the stator coil is necessary.

The working principle is that AC voltage is applied to the motor windings. The applied AC voltage will not make the motor run, but will ensure that sufficient heat is generated to prevent condensation in the motor. The terminal box is kept warm and dry by the heat generated via the mains voltage connected. However, it is a condition that the terminal box is not exposed to open air. It must be provided with a suitable cover to protect it from rain and the drain plugs have to be removed to obtain ventilation in the motor and terminal box. See *Operation in condensing environments*, on page 20.

Motors with PTC sensors

TM02 7038 2403

Fig. 48 PTC sensor incorporated in windings

Built-in PTC sensors (thermistors) protect the motor against overheating. Single-phase motors are protected against slow and rapid overheating. Three-phase motors are protected against slow overheating.

We offer built-in PTC sensors to protect the motor.

Three-phase mains-operated motors of 3 kW and up have PTC sensors as standard.

Note that PTC sensors must be connected to an external tripping unit connected to the control circuit.

Protection according to IEC 60034-11:

- slow and rapid overheating.

PTC sensors comply with DIN 44082. Maximum voltage at the terminals, U_{max} = 2.5 VDC. All tripping units available for DIN 44082 PTC sensors meet this requirement.

Figure 49 shows a typical circuit of a three-phase motor with PTC sensors.

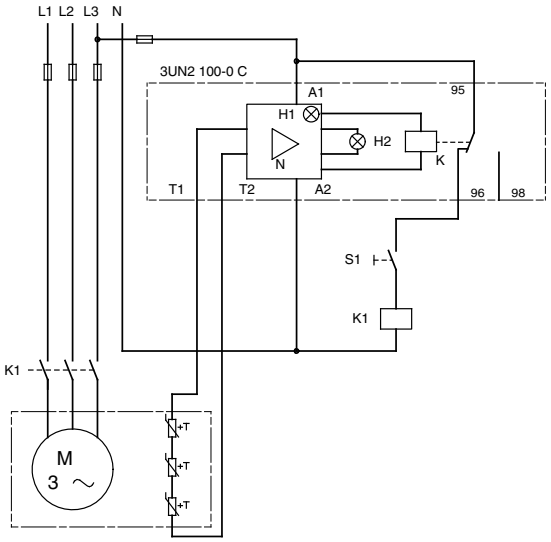

TM00 3965 1494

Fig. 49 Three-phase motor with PTC sensors

Legend

Symbol	Designation
S1	On/off switch
K1	Contactor
+T	PTC sensor (thermistor) in motor
M	Motor
3UN2 100-0 C	Tripping unit with automatic resetting
N	Amplifier
K	Output relay
H1	LED "Ready"
H2	LED "Tripped"
A1, A2	Connection for control voltage
T1, T2	Connection for PTC sensor loop

Motors with thermal switches (PTO)

TM02 7042 2403

Fig. 50 Thermal switch incorporated in windings

Built-in thermal switches protect the motor against overheating. Single-phase motors are protected against slow and rapid overheating. Three-phase motors are protected against slow overheating.

We offer mains-operated motors with bimetallic thermal switches in the motor windings.

Three-phase mains-operated motors with supply voltages F, G and O are available with built-in thermal switches.

Note that thermal switches must be connected to an external control circuit to protect the motor against slow overheating. The thermal switches require no tripping unit.

Protection according to IEC 60034-11:

- slow and rapid overheating.

As protection against seizure, the motor must be connected to a motor-protective circuit breaker.

Thermal switches tolerate the following maximum loads:

U_{max}	250 VAC
I_N	1.5 A
I_{max}	5.0 A (locked-rotor and breaking current)

Figure 51 shows a typical circuit of a three-phase motor with built-in bimetallic thermal switches.

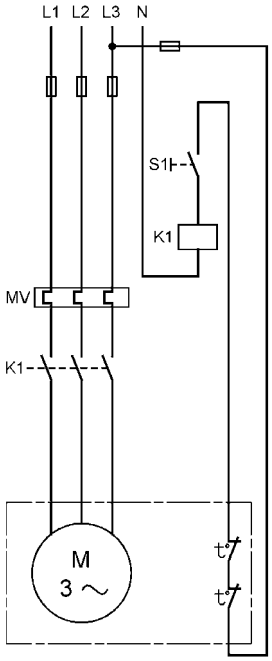

TM00 3964 1494

Fig. 51 Three-phase motor with thermal switches

Legend

Symbol	Designation
S1	On/off switch
K1	Contactor
t°	Thermal switch in motor
M	Motor
MV	Motor-protective circuit breaker

Undersize and oversize motors

The available motor sizes are shown in section *Mains-operated motors, 50 Hz* on pages 126 to 129.

Undersize and oversize motors are defined as the next kW size below or above the fitted standard motor.

Note that the CM 1, 3 and 5 cannot be combined with frame sizes 112 and 132.

We recommend that you use an oversize motor if the operating conditions fall outside the standard conditions.

We especially recommend oversize motors in these cases:

- The pump is installed at an altitude of more than 1000 metres above sea level.
- The viscosity or density of the pumped liquid is higher than that of water.
- The ambient temperature exceeds 55 °C (CM).

We recommend that you use an undersize motor if the operating conditions do not at all reach the standard conditions.

We especially recommend undersize motors in these cases:

- The viscosity or density of the pumped liquid is lower than that of water.
- The duty point of the pump is constant, and the flow rate is significantly lower than the recommended maximum flow rate.

Terminal box positions

As standard the terminal box is mounted in 12 o'clock position as shown in fig. 52. CM pumps with motor frame sizes of 71 and 80 are available with other terminal box positions on special request.

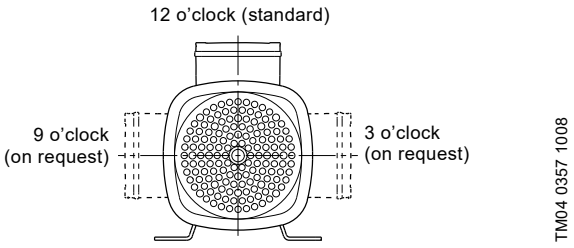

Fig. 52 Terminal box positions of frame sizes 71 and 80, as seen from the fan cover side

Functional modules for CME pumps

CME pumps offer a number of advantages, depending on hardware combinations and software configuration of the motor. For example, various functional modules are available.

As standard, the CME pumps are fitted with the standard functional module. The basic or advanced module is available as a customised solution.

Basic functional module (FM 100)

The basic module has only the most necessary inputs for closed- and open-loop operation. The module also enables communication via a GENIbus connection.

The basic module has these connections:

- analog voltage input
- two digital inputs or one digital input and one open-collector output
- GENIbus connection.

Standard functional module (FM 200)

The standard module has more inputs and outputs than the basic module and is suitable for even more demanding applications.

The standard module has these connections:

- two analog inputs
- two digital inputs or one digital input and one open-collector output
- Grundfos Digital Sensor input and output
- two signal relay outputs
- GENIbus connection.

Advanced functional module (FM 300)

The advanced module has a number of inputs and outputs enabling the motor to be used in advanced applications where many inputs and outputs are required.

The advanced module has these connections:

- three analog inputs
- one analog output
- two dedicated digital inputs
- two configurable digital inputs or open-collector outputs
- Grundfos Digital Sensor input and output
- two Pt100/1000 inputs
- LiqTec sensor inputs
- two signal relay outputs
- GENIbus connection.

Pumps

Pumping of liquids down to -30 °C

We offer custom-built pumps for pumping liquids down to -30 °C. The pumps have an oversize neck ring ensuring that impellers do not seize up as a result of thermal expansion.

We offer the above solution for CM and CME in I and G versions (stainless steel).

Surface treatment

Cleaned and dried pumps

We recommend cleaned and dried pumps for use in applications involving strict demands on cleanliness and surface quality, such as low content of silicone. Before assembly, all pump parts are cleaned in 60 to 70 °C water with a cleaning agent. All pump parts are then thoroughly rinsed in de-ionised water and dried. The pump is assembled without any use of silicone lubricants.

Cleaned and dried pumps are not performance-tested.

Electropolished stainless-steel pumps

Electropolished pumps are often used in the pharmaceutical industry and in the food and beverage industry where materials and surface quality must meet strict requirements to hygiene or corrosion resistance.

Electropolishing removes burrs as well as metallic and non-metallic inclusions, providing a smooth, clean and corrosion-resistant stainless-steel surface.

First, all components are pickled in a mixture of nitric and hydrofluoric acid. Subsequently, the components are electropolished in a mixture of sulphuric and phosphoric acid. Finally, the components are passivated in nitric acid.

To meet the strict hygienic requirements to material and surface quality, we offer electropolished stainless-steel pumps with the following surface quality:

Surface quality: Ra ≤ 0.8 µm.

Alternative colouring

We offer custom-built pumps in any NCS- or RAL-specified colour to suit your requirements.

The used paint is water-based. Painted parts correspond to corrosion class III.

All pump types and sizes are available with alternative colouring.

Customised nameplate

We offer additional customised nameplates attached to the pump:

- a nameplate supplied by you
- a Grundfos nameplate customised in terms of a specific duty point
- a Grundfos nameplate with a tag number.

Note that the Grundfos standard nameplate is always fitted to the pump.

Shaft seal arrangements

The shaft seal is developed with customisation in mind. Depending on the media, you may combine the seal faces in any way.

Available stationary seal faces: Q, B, U.

Available rotating seal faces: Q, V, U.

Rubber: E, V, K.

For further details about seal face material codes, see *Identification* on page *Identification*.

Alternative connection positions

The pump is available with various connection positions on special request. See fig. 53.

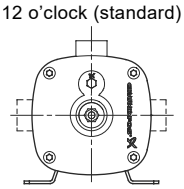

TM03 8709 1008

Fig. 53 Alternative connection positions as seen from the pump inlet side

Alternative pipe connections

A wide range of pipe connections are available for the CM and CME pumps:

- Tri-Clamp®
- DIN, JIS, ANSI flange (combi flange)
- Victaulic® coupling
- Whitworth thread Rp
- internal NPT thread.

The available pipe connections are shown in fig. 54.

TM04 3937 0409

Fig. 54 Examples of pipe connections

29. Accessories

Pipe connections

Various sets of flanges and couplings are available for pipe connection.

Flange sets for CM, CME (DIN/ANSI/JIS)

All materials in contact with the pumped liquids are made of stainless steel EN 1.4408/AISI 316.

The pipe stub is made of stainless steel EN 1.4408/AISI 316, the flange part is made of cast iron EN-GJL-200 and the O-rings are made of EPDM or FKM.

Flange		Pump type	Pipe connection	Pump thread	L* [mm]		Product number
					Flange mounted on pump inlet	Flange mounted on pump outlet	
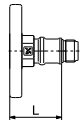	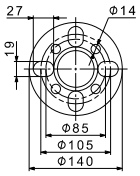	CM 1 CM 3	DN 32	Rp	49.0	78.0	96904693
				NPT			96904705
		CM 5		Rp			96904696
				NPT			96904708
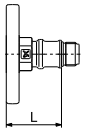	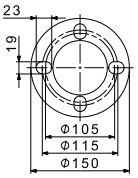	CM 10	DN 40	Rp	44.0	68.0	96904699
				NPT			96904711
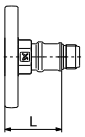	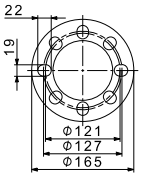	CM 15 CM 25	DN 50	Rp	48.0	68.0	96904702
				NPT			96904714

TM04 3867 0309

TM04 3869 0309

TM04 3868 0309

* Length from the outer edge of the flange to the pump inlet or outlet port.

Please pay attention to the compatibility between the pump and flange before ordering. See tables below.

CM pumps compatible with DIN/ANSI/JIS flanges

Pump type	Material version	MG 71/80 1-ph	MG 71/80 3-ph	MG 90 1-ph	MG 90 3-ph	MG 100/112/132
CM 1, 3, 5	Cast iron		●*	●	●	●
	Stainless steel	●*	●**	●	●	●
CM 10, 15, 25	Cast iron	●	●	●	●	●
	Stainless steel	●	●	●	●	●

* 17 mm clearance.

** 32 mm clearance.

CME pumps compatible with DIN/ANSI/JIS flanges

Pump type	Material version	MGE 71	MGE 80	MGE 90	MGE 90 3-ph	MGE 100	MGE 112/132
CM 1, 3, 5	Cast iron			●*	●	●	
	Stainless steel				●	●	
CM 10, 15, 25	Cast iron		●	●	●	●	●
	Stainless steel		●	●	●	●	●

* 13 mm clearance.

Tri-clamp and Victaulic connections for CM and CME

Pump type	Material version	MG, MGE 71	MG, MGE 80	MG, MGE 90	MG, MGE 100	MG, MGE 100/112/132
CM 1, 3, 5	Cast iron		●	●	●	●
	Stainless steel		●	●	●	●
CM 10, 15, 25	Cast iron		●	●	●	●
	Stainless steel		●	●	●	●

Victaulic® connections for CM, CME

All materials in contact with the pumped liquids are made of stainless steel EN 1.4408/AISI 316.

The pipe stub is made of stainless steel EN 1.4408/AISI 316, and the O-rings are made of EPDM or FKM.

Victaulic® connection	Pump type	Pump thread	D [mm]	L* [mm]	Product number
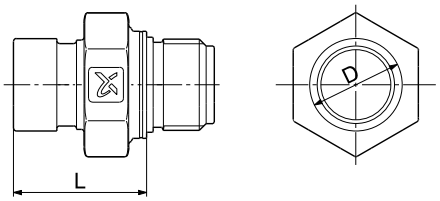 TM04 3865 0309	CM 1 CM 3	Rp	33.7	48.5	96904694
		NPT			96904706
	CM 5	Rp	33.7 / 42.4	48.5	96904697
		NPT			96904709
	CM 10	Rp	48.3	48.5	96904700
		NPT			96904712
	CM 15 CM 25	Rp	60.3	50.1	96904703
		NPT			96904715

* Length from the outer edge of the connection to the pump inlet or outlet port.

Coupling, pipe stub and gasket for Victaulic® connections

Parts in contact with the pumped liquid are made of stainless steel EN 1.4401/AISI 316 and rubber.

A Victaulic® coupling set consists of two coupling halves (Victaulic, type 77), one gasket, one pipe stub (for welding or threaded), bolts and nuts.

Coupling and pipe stub	Pump type	Pipe stub	Pipe connection	Rubber parts	Number of coupling sets required	Product number
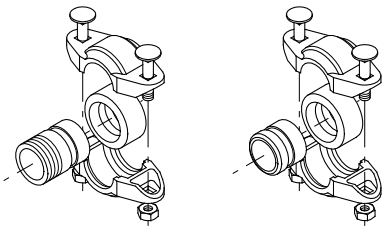 TM00 3808 1094	CM 1, CME 1 CM 3, CME 3 CM 5, CME 5*	Threaded	R 1	EPDM	2	97575245
				FKM	2	97575246
		For welding	DN 25	EPDM	2	97575247
				FKM	2	97575248
	CM 5, CME 5**	Threaded	R 1 1/4	EPDM	1	00419911
				FKM	1	00419905
		For welding	DN 32	EPDM	1	00419912
				FKM	1	00419904
	CM 10, CME 10	Threaded	R 1 1/2	EPDM	2	97575249
				FKM	2	97575250
		For welding	DN 40	EPDM	2	97575251
				FKM	2	97575252
	CM 15, CME 15 CM 25, CME 25	Threaded	R 2	EPDM	2	00339911
				FKM	2	00339918
		For welding	DN 50	EPDM	2	00339910
				FKM	2	00339917

* For the outlet port. Note that only one coupling set is required for the outlet port.

** For the inlet port.

Tri-Clamp® connections for CM, CME

All materials in contact with the pumped liquids are made of stainless steel EN 1.4408/AISI 316.

The pipe stub is made of stainless steel EN 1.4408/AISI 316, and the O-rings are made of EPDM or FKM.

Tri-Clamp®	Pump type	Pump thread	D [mm]	L* [mm]	Product number
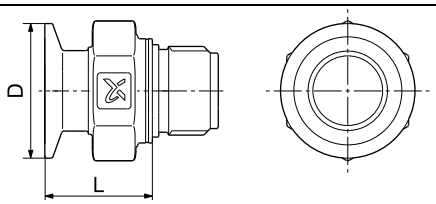 TM04 3866 0309	CM 1 CM 3	Rp	50.4	40.3	96904695
		NPT			96904707
	CM 5	Rp	50.4	35.3	96904698
		NPT			96904710
	CM 10	Rp	50.4	37.4	96904701
		NPT			96904713
	CM 15 CM 25	Rp	63.9	37.4	96904704
		NPT			96904716

* Length from the outer edge of the Tri-Clamp® connection to the pump inlet or outlet port.

Clamping ring, pipe stub and gasket for Tri-Clamp® connections

Clamping ring	Pipe stub	Gasket
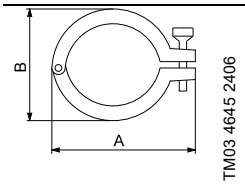 TM03 4645 2406	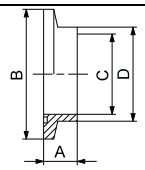 TM03 4646 2406	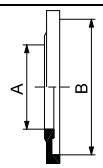 TM03 4647 2406

Pump type	Nominal diameter [mm]	A [mm]	B [mm]	A [mm]	B [mm]	C [mm]	D [mm]	A [mm]	B [mm]
CM, CME: 1, 3, 5, 10	38.0	92.0	59.5	21.5	50.5	35.6	38.6	35.3	50.5
CM, CME: 15, 25	51.0	104.4	74.0	21.5	64.0	48.6	51.6	48.0	64.0

The clamping ring is made of stainless steel EN 1.4301/AISI 304.

The pipe stub is made of stainless steel EN 1.4401/AISI 316.

The gasket is made of PTFE or EPDM.

Pump type	Pipe connection	Connection material	Gasket	Pressure [bar]	Number of coupling sets required	Product number
CM, CME: 1, 3, 5, 10	DN 32	Stainless steel	EPDM	16	2	96515374
			PTFE		2	96515375
CM, CME: 15, 25	DN 50		EPDM		2	96515376
			PTFE		2	96515377

Potentiometer for CME

The potentiometer is for setpoint setting and start/stop of the CME pump.

Product	Product number
External potentiometer with cabinet for wall mounting	625468

Communication interface modules (CIM) for CME

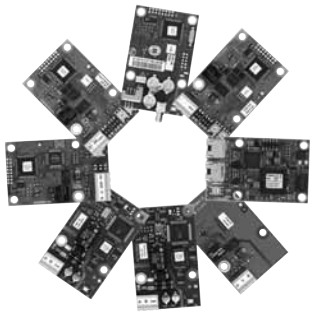

TM07 6519 2020

Fig. 55 Grundfos CIM modules

A CIM module is an add-on communication interface module for MGE motors. The CIM module enables data transmission between the pump and an external system. for example a BMS (building management system) or SCADA system.

We offer the following CIM modules:

Description	Fieldbus protocol	Product number
CIM 050	GENIbus	96824631
CIM 100	LonWorks	96824797
CIM 150	PROFIBUS DP	96824793
CIM 200	Modbus RTU	96824796
CIM 300	BACnet MS/TP	96893770
CIM 500	BACnet IP	98301408
CIM 500	EtherNet/IP	
CIM 500	GIC	
CIM 500	GRM IP	
CIM 500	Modbus TCP	
CIM 500	PROFINET	

Grundfos GO Remote

Grundfos GO Remote is used for wireless infrared or radio communication with the pumps.

MI 301

The MI 301 is a module with built-in infrared and radio communication. The MI 301 must be used in conjunction with an Android or iOS-based smart device with a Bluetooth connection. The MI 301 has a rechargeable Li-ion battery and must be charged separately.

TM05 3890 1712

Fig. 56 MI 301

Supplied with the product:

- Grundfos MI 301
- battery charger
- quick guide.

Product numbers

Grundfos GO Remote variant	Product number
Grundfos MI 301	98046408

Sensors for CM, CME

The sensors must be fitted to the pipe with suitable fittings.

Standard sensors for CM and CME

Accessory	Type	Measuring range	Connection	Product number
Danfoss temperature sensor, Pt100B	Pt100B, with 2 m cable, 50 pieces, without O-rings	-50 - 200 °C	1/2"	99408847
	Pt100B, with 2 m cable, one piece, with EPDM and FKM O-rings	-50 - 200 °C	1/2"	99501120
	Pt100B, with 2 m cable, 50 pieces, with EPDM O-ring	-50 - 200 °C	1/4"	99239596
	Pt100B, with 2 m cable, one piece, with EPDM O-ring	-50 - 200 °C	1/4"	99532820
Accessories for Danfoss temperature sensor Pt100B	EPDM O rings, 50 pieces	-	-	99412727
	FKM O rings, 50 pieces	-	-	99412883
Hornsberg differential temperature sensor, ESTD	ESTD, 4-20 mA	0 - 20 °C	1/2"	96409362
	ESTD, 4-20 mA	0 - 50 °C	1/2"	96409363
Grundfos pressure transmitter, ISP40	ISP40 0-6b, with 5 m M12 cable	0 - 6 bar	1/2"	99792159
	ISP40 0-10b, with 5 m M12 cable	0 - 10 bar	1/2"	99792175
	ISP40 0-16b, with 5 m M12 cable	0 - 16 bar	1/2"	99792176
Grundfos pressure manager, PM	PM2, 1 x 200-220 V, 0-40 °C	1.5 - 5 bar	G1"	96848738
	PM2, 1 x 100-120 V, 0-40 °C	1.5 - 5 bar	G1"	96848750

For more information, go to Grundfos Product Center (http://product-selection.grundfos.com/).
Note that the CM and CME pumps are fitted with 3/8" plugs. In order to fit the sensors directly on the CM and CME pumps, an adapter must be used.

Direct sensors for CM and CME

Accessory	Type	Measuring range	Connection	Product number	
				EPDM	FKM
Grundfos relative pressure and temperature sensor, RPS					
TM07 6692 2520	RPS, 0.5-3.5 V/4.1, plug and play set	0 - 2.5 bar / 40 psig	1/2"	99472356	99472357
		0 - 4 bar / 60 psig	1/2"	99387871	99472358
		0 - 6 bar / 90 psig	1/2"	99472359	99472360
		0 - 10 bar / 150 psig	1/2"	99514113	99472355
		0 - 16 bar / 230 psig	1/2"	99514415	99514116
Grundfos differential pressure and temperature sensor, DPS					
TM07 6690 2520	DPS, 0.5-3.5 V/4.1, plug and play set with AISI 316 housing and 6 mm tube adaptors	0 - 2.5 bar / 40 psig	-	99472339	-
		0 - 4.0 bar / 60 psig	-	99472340	

Grundfos flow and temperature sensor, VFS						
TM07 6695 2520	VFS 0.5-3.5 V/4.1, plug and play set with BSPP brass fittings	1 - 20 lpm / 0.3 - 5.2 gpm	1/2"	98529414	99508194
		2 - 40 lpm / 0.5 - 10.5 gpm	3/4"	99508184	99508195
		5 - 100 lpm / 1.3 - 26.4 gpm	3/4"	99508185	99508196
		10 - 200 lpm / 2.6 - 52.8 gpm	3/4"	99508196	99508197
		20 - 400 lpm / 5.2 - 105.6 gpm	1.1/4"	99508187	99508198
Grundfos flow and temperature sensor, VFI/T						
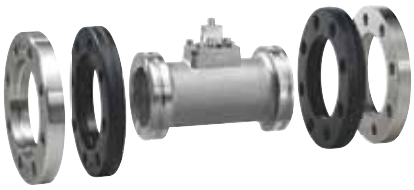 TM07 6694 2520	VFI/T 0-10 V, plug and play set with BSPP fittings and cable	0.3 - 6 m^3 / h / 1.3 - 26.4 gpm	DN 18	97688334	97688342
		0.6 - 12 m^3 / h / 2.6 - 52.8 gpm	DN 25	99513543	99513547
		1.3 - 25 m^3 / h / 5.7 - 110 gpm	DN 32	99513544	99513549
		2 - 40 m^3 / h / gpm	DN 40	99513499	99513535
Grundfos pressure and temperature sensor, RPI/T						
TM07 6691 2520	RPI/T, plug and play, with 2 m cable	0 - 2.5 bar / 40 psig	1/2"	97748930	97748960
		0 - 4 bar / 60 psig	1/2"	97748941	97748961
		0 - 6 bar / 90 psig	1/2"	97748942	97748962
		0 - 10 bar / 150 psig	1/2"	97748944	97748963
		0 - 16 bar / 230 psig	1/2"	97748945	97748964
	CNV power supply and converter	-	-	96983684	-
Accessories for RPS, DPS, and VFS sensors	1200 mm cable	-	-	98515668	-
	2900 mm cable	-	-	98444532	-
Accessories for RPI and VFI sensors	2 m M12 cable	-	-	98515668	-
	5 m M12 cable	-	-	98444532	-

For more information, go to Grundfos Product Center (http://product-selection.grundfos.com/).

Note that the CM and CME pumps are fitted with 3/8" plugs. In order to fit the sensors directly on the CM and CME pumps, an adapter must be used.

MP 204 motor protector

TM03 1471 2205

Fig. 57 MP 204

The MP 204 is an electronic motor protector and data collecting unit. Apart from protecting the motor, it can also send information to a control unit via GENIbus, such as the following:

- trip
- warning
- energy consumption
- input power
- motor temperature.

The MP 204 protects the motor primarily by measuring the motor current by means of a true RMS measurement.

The pump is protected secondarily by measuring the temperature with a Tempcon sensor, a Pt100/Pt1000 sensor and a PTC sensor or thermal switch.

The MP 204 is designed for single- and three-phase motors.

Note that the MP 204 must not be used together with frequency converters.

Features

- Phase-sequence monitoring
- indication of current or temperature
- input for PTC sensor or thermal switch
- indication of temperature in °C or °F
- 4-digit, 7-segment display
- setting and status reading with Grundfos GO Remote
- setting and status reading via the Grundfos GENIbus fieldbus.

Tripping conditions

- Overload
- underload (dry running)
- temperature
- missing phase
- phase sequence
- overvoltage
- undervoltage
- power factor (cos φ)
- current unbalance.

Warnings

- Overload
- underload
- temperature
- overvoltage
- undervoltage
- power factor (cos φ)
- run capacitor (single-phase operation)
- starting capacitor (single-phase operation)
- loss of communication in network
- harmonic distortion.

Learning function

- Phase sequence (three-phase operation)
- run capacitor (single-phase operation)
- starting capacitor (single-phase operation)
- identification and measurement of Pt100/Pt1000 sensor circuit.

Product number

Description	Product number
MP 204 motor protector	96079927

Cover for CM motor

The cover protects the motor from ingress of liquid, especially if the pump is installed in a vertically tilted position with the motor end pointing upwards.

Product number

Description	Product number
Cover for CM motors, frame sizes 71 and 80	97528743

30. Grundfos Product Center

Online search and sizing tool to help you make the right choice.
http://product-selection.grundfos.com

All the information you need in one place

Performance curves, technical specifications, pictures, dimensional drawings, motor curves, wiring diagrams, spare parts, service kits, 3D drawings, documents, system parts. The Product Center displays any recent and saved items - including complete projects - right on the main page.

Downloads

On the product pages, you can download installation and operating instructions, data booklets, service instructions, etc. in PDF format.

TM07 2384

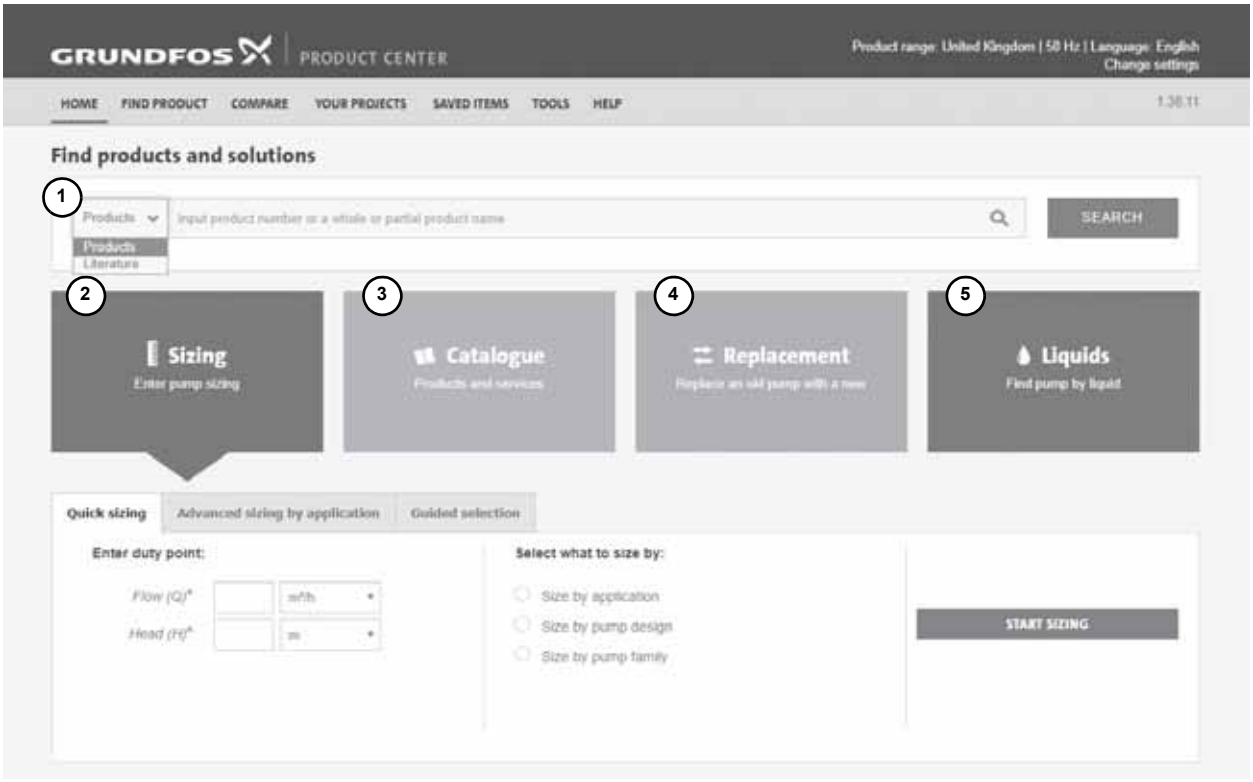

TM07 2383

Pos.	Description
1	This drop-down menu enables you to set the search function to "Products" or "Literature".
2	**SIZING** enables you to size a pump based on entered data and selection choices.
3	**CATALOGUE** gives you access to the Grundfos product catalogue.
4	**REPLACEMENT** enables you to find a replacement product. Search results will include information on the lowest purchase price the lowest energy consumption the lowest total life cycle cost.
5	**LIQUIDS** enables you to find pumps designed for aggressive, flammable or other special liquids.

be think innovate

Trademarks displayed in this material, including but not limited to Grundfos, the Grundfos logo and "be think innovate" are registered trademarks owned by The Grundfos Group. All rights reserved.

© 2020 Grundfos Holding A/S, all rights reserved.

96903467 12.2020
ECM: 1301004

GRUNDFOS A/S
DK-8850 Bjerringbro . Denmark
Telephone: +45 87 50 14 00
www.grundfos.com

GRUNDFOS